SR Series

GASON®
AGRICULTURE

A member of
Tractor & Machinery Association of Australia

1800 & 2000 SR SERIES AIR SEEDER OPERATOR'S MANUAL

Covering the 1860, 1880/90 & 2120/50 Models

GPN 216593 REVISION - 10/09

Page Intentionally Blank

CONTENTS

CONTENTS

INTRODUCTION

A.F. Gason Pty Ltd is an Australian owned family business operating from within rural Victoria. The Gason company has been servicing the needs of rural Australians for more than 60 years. We operate through a local dealer support network that spans the country. A.F. Gason's would like to thank you for purchasing your Australian made Air Seeder, and trust that you will have many years of trouble free service.

The Air Seeders have been designed to be functional, practical and reliable. They incorporate the latest technology in air seeder design but retain their basic functionality to ensure ease of maintenance.

The Gason 1800 and 2000 range of Air Seeders can perform a variety of seeding operations and are available in either a front tow (FT) or rear tow (RT) model. There are a number of bin capacities available with either 2 or 3 bin configurations. A large range of sowing outlet configurations are available, making the Air Seeder adaptable to a variety of implements to perform different tillage practices.

The Gason metering system is a positive and accurate method of placing seed and fertilizer into the air stream. The system is capable of sowing conventionally, often referred to as single shooting (seed and fertilizer together), deep banding (separating the seed and fertilizer) or triple shooting (handling 3 separate products through to the implement). The system can also sow summer and winter crops with minimal adjustment.

This manual endeavors to provide the owner with a complete understanding of the Air Seeder's operation and the processes required to obtain the highest level of performance possible. It is suggested that the owner/operator read this manual and any other literature that has been supplied with your machine to ensure a safe and trouble free operation.

References to the left and right hand sides of the Air Seeder are from the rear of the machine looking forward.

Fig. 1 1880RT Series Air Seeder.

Fig. 2 2150FT Series Air Seeder with Auger and rear walkway (optional).

Fig. 3 2150RT Series Air Seeder.

Introduction

The Air Seeder uses the flow of air to convey seed and fertilizer to each tine. This type of material transfer is known as pneumatic conveyance (refer Fig. G1).

The material being sown must be metered accurately into the air stream to deliver a constant application rate.

How the Air Seeder Operates

Seed and fertilizer are transferred from pressurized bins to multiple conveying tubes via separate meterboxes. A meterwheel arrangement inside the meterbox is rotated by either a ground wheel (ground drive seeder) or hydraulic motor (VRT equipped Seeder).

As the ground wheel rotates, so too does the metering system. The metering system can be disengaged or engaged at the tractor cab.

A blower is located upstream of the meterbox on the Air Seeder. It is used to produce the airflow required to convey the material.

The seed and fertilizer is conveyed towards the implement. It is then evenly divided into smaller amounts as it passes through the primary splitters.

The material then travels along the secondary hoses to the secondary manifold heads. It is distributed to the tertiary hoses and transferred to the sowing boots mounted on the tines.

1088

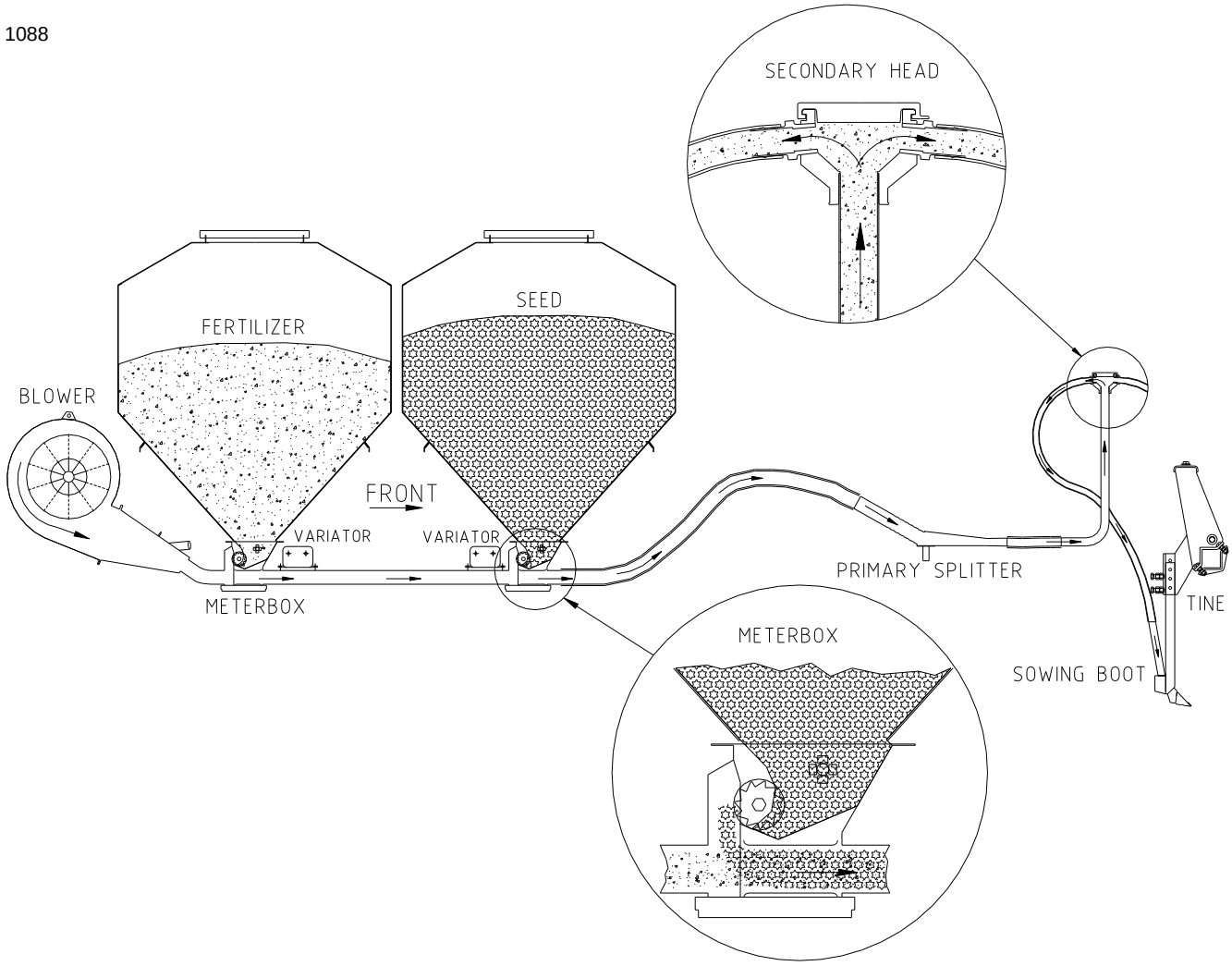

Fig. G1 Two bin model shown.

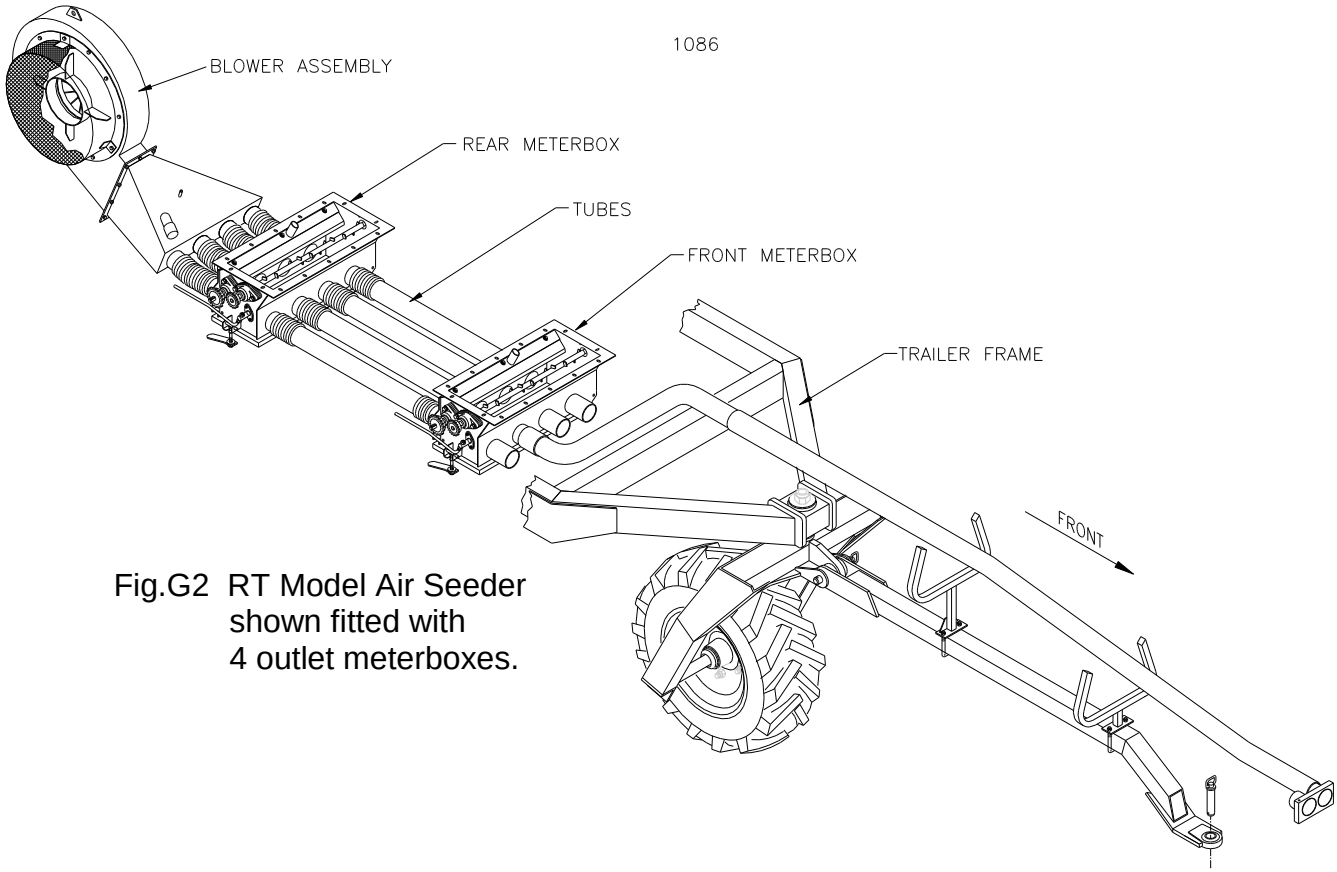

Fig.G2 RT Model Air Seeder shown fitted with 4 outlet meterboxes.

Air Seeder Construction

The RT model air seeders trail behind the implement while the FT models are towed in front of the implement. The basic operation of both designs is the same other than the location of the seeder.

The RT models are supplied with all components to attach to the rear of the implement. Some modifications may be required when fitting to non-Gason implements but in most cases fitment is a straight forward operation. The rear tow models are also available with a rear hitch system that attaches to the rear of the seeder, which will allow a set of harrows or light prickle chain to be towed.

The FT models are fitted with a roller style rear hitch with which to pull the implement. This hitch, when left unpinned, dramatically reduces the load on the seeder during turning which will help extend the life of the machine. The trailer has also been designed to withstand the high loads exerted on the frame while pulling the implement.

In both cases, the seeders have been designed to allow quick and easy detachment from the implement and tractor.

The 1800 and 2000 air seeder range has a folding ladder that is fitted to the left hand side of the machine. The walkway is set low and runs along the left side or between the front and rear bins. This offers a safe environment in which to fill the large capacity machine.

The bins have been made from 2.5 and 3mm thick mild steel with folded corners, which are fully welded, on both internal and external joints.

The bins have been produced in two halves and are painted using a high bake enamel to reduce corrosion both inside and out before joining. The bin halves are then joined using structural quality rivets and sealed with high-grade sealant. The sealant

can be replaced at any time, if required, without splitting the bins.

The trailers are built from 350/450-grade rectangular hollow section with either side plates or truss system for stiffening. It has been designed and tested to reduce the possibility of rearing if unevenly loaded.

The metering system incorporates nylon and stainless steel componentry in areas affected by fertiliser induced corrosion.

The output of the ground driven metering system is controlled by a stepless variable speed gearbox, which can easily be adjusted. Each meter system has its own separate adjustment. VRT equipped seeders use individual hydraulic motors to control metering rates.

The blower's hydraulic system uses quality components and will require minimal maintenance. The system has been designed to operate in a harsh environment. It is fitted with a check valve to prevent damage if incorrectly connected.

The blower is mounted on the trailer frame and houses a high capacity impeller. It has been specifically designed to operate in the rough conditions that occur during normal operation. The impeller is directly mounted to the motor, which means that there are no external bearings or an external coupling.

Calibrating the ground driven metering system has been simplified by providing a chart with instructions to the side of the bin. There is no need to calculate figures if calibrating within average application rates.

A collection tray and an accurate scale set is included with the Air Seeder.

For further information on individual aspects of the seeder refer to the appropriate section in this manual.

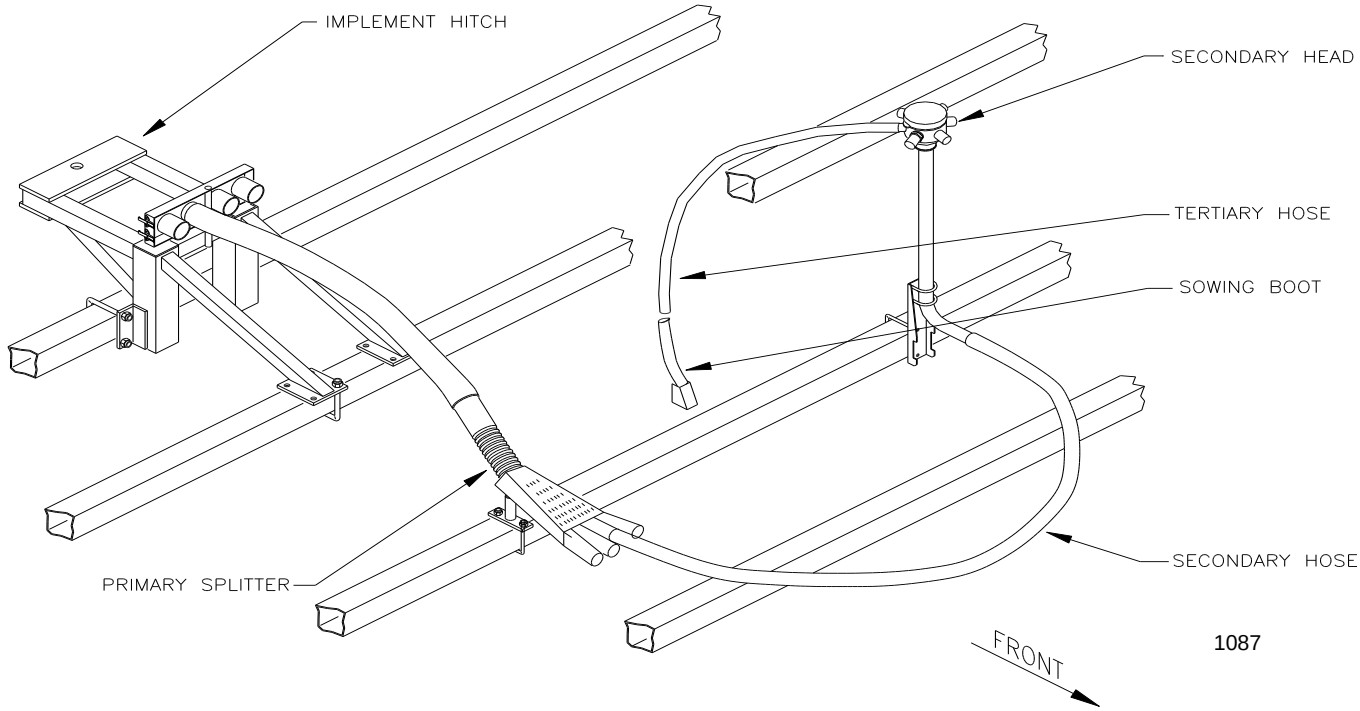

Fig. G3 Distribution System.

The Air Seeder has been designed with safety in mind. However, the equipment is only as safe as the person operating it.

Do not operate the Air Seeder until you have read and understood this manual. If you feel you need help or advice on the operation of the Seeder, contact your local authorized Gason Dealer.

To ensure trouble free and safe operation of your seeder, it is important to carry out a daily safety check to reduce the possibility of a costly breakdown.

Items to Check Daily During Operation

1. Check all wheel nuts are tight during the first couple of days of seeding or after transportation (refer page 17).
2. Check all tyre pressures and tyre conditions in general. **NOTE:** a badly worn rear drive tyre will affect the metering accuracy.
3. Ensure the safety guard on the blower unit is fitted.
4. Check all hydraulic breakaway connections are locked into position.
5. Check all hydraulic hoses and fittings for leaks.
6. Check all chains and sprockets for wear or movement on the shaft.
7. Check metershafts turn freely before operating each day or after transporting when loaded (refer page 62).
8. Check draw bar pins for wear.
9. Ensure bin lids are closed and that there are no air leaks when blower is operating.
10. Check distribution hoses for damage or kinks, especially after operating the wing fold system on the implement.

General Safety Conditions

DO NOT ride on the machine when operating.
DO NOT touch or attempt to adjust any moving parts.
DO NOT adjust hydraulic fittings while under pressure.
DO NOT remove any safety guards while the seeder is operating.
DO NOT operate the machine unless all safety guards are securely fitted.

DO carry out the daily safety checks and operate the seeder in a **safety conscious** manner.

Hydraulics

Before working on the hydraulic system always check that the blower **is not** operating, and that there is no pressure in the hydraulic system.

Never attempt to disconnect a breakaway coupling if the blower is operating. Turn the **tractor off** if working on the metering system of a **VRT** equipped seeder.

Leaving the Air Seeder Unattended

Always close the bin lids and ensure that no material is left in the bins after seeding. Chock the Air Seeder wheels to prevent it from rolling.

When Working on the Air Seeder

Place suitable stands under the trailer if removing a wheel or carrying out major work.

Never enter the bin compartment unless another person is present. Always take proper safeguards if entering a bin or working on components that have been exposed to treated seed.

Wear ear protection if working near the blower while operating.

Transporting

Never transport the seeder with the clutch switch engaged (ground drive models).

Avoid transporting the seeder long distances when loaded. Do not exceed 20km/h when towing the seeder when loaded. Maximum speed for towing an empty seeder is 40km/h. Use safety chains where provided.

For further information and helpful tips on transporting refer to the Transporting section of this manual (refer page 29).

Lifting the Air Seeder

The Air Seeder has been supplied with 2 lifting eyes located on the trailer frame between the bins.

The 1860-2150 model seeders will require a third front sling for lifting.

Ensure you have safe lifting equipment with the correct capacity before attempting to hoist the machine.

Fig. G4 2150RT fully assembled being lifted.

When lifting the seeder it is preferable to use soft slings and shackles at the trailer. If chains must be used ensure that the bins are protected against paint damage.

Seeder Weight Unloaded

1860 model	2900kg approx.
1880 model	3300kg approx.
1890 model	3500kg approx.
2120 model	4900kg approx.
2150 model	5500kg approx.

Auger Operation and Safety

Refer to the Auger section of this manual.

Pasture Planter Operation and Safety

Refer to the Pasture planter Operators Manual.

Fig. G5 Pasture planter fitted to a 1880FT.

Dimensions	***1860FT***	***1860RT***
Overall width	2500	2760mm∴
Overall height*	2870	2870mm
Top of bin height	2750	2750mm
Overall length^	6160	9485mm
Seeder length	6160	5740mm
Rear wheel centres	2000	2000mm
Front wheel centres (CTC models)	-	2000mm
Step height	500	500mm
Ground Clearance	440	460mm

*Worklight stand folded down. ^Includes hitch but no options

∴ CTC model on 2 metre & 3 metre centres.

∴ CTS model on 3 metre centres

Weights*

Unloaded	2500	2500kg
Loaded	8830	8830kg

(material in both bins at 1000kg/1000 litres)

*Weights are for 2 bin models only and excludes Auger and options.

Bin Capacity 2 Bin

By volume:

Front bin	44.5%	2760	2760 L
Rear bin	55.5%	3440	3440 L
Total capacity		6200	6200 L

By weight:

Front bin (wheat)	2340	2340kg
Rear bin (super)	3990	3990kg
Total weight	6330	6330kg

(wheat = 850kg/1000 litres

(super = 1160kg/1000 litres)

Bin Capacity 3 Bin (Equal Middle/Rear Bin)

By volume:

Front bin	42.5%	2760	2760 L
Middle bin	28%	1815	1815 L
Rear bin	29.5%	1915	1915 L
Total capacity		6490	6490 L

Bin Capacity 3 Bin (Larger Rear Bin)

By volume:

Front bin	42.5%	2760	2760 L
Middle bin	26.1%	1695	1695 L
Rear bin	31.4%	2035	2035 L
Total capacity		6490	6490 L

Wheels

Size:	***1860FT***	***1860RT***
Front tyre (Single)	----	400/55-22.5
Front tyre (CTC)	----	340/80 R18
Front tyre (CTS)	----	15.5/80-24
Rear tyres Std.	18.4-30	18.4-30

Type:

Front tyres	Radial/Gripster
Rear Tyres	R1 Gripster

Tyre	**Recommended Pressure**	
	kPa	psi
340/80 R18 Radial	140	20
400/55-22.5 (14pr) Flotation	140	20
15.5/80-24 (12pr) Gripster	140	20
18.4-30 (12pr) Gripster	220	32

Refer to page 13 for Hydraulic, Variator and Drive System Specifications.

Dimensions	***1880FT***	***1880RT***
Overall width	3620	3620mm
Overall height*	2980	2980mm
Top of bin height	2830	2830mm
Overall length^	6375	10,250mm
Seeder length	6375	5870mm
Rear wheel centres	3010	3010mm
Front wheel centres (dual)	-	650mm
Front wheel centres (CTS & CTC)	-	3000mm
Step height	530	530mm
Ground Clearance	440	595mm

*Worklight stand folded down. ^Includes hitch but no options

Weights*

Unloaded	2990	2990kg
Loaded	11,400	11,400kg

(material in both bins at 1000kg/1000 litres)

*Weights are for 2 bin models only and excludes Auger and options.

Bin Capacity 2 Bin

By volume:

Front bin	44%	3600	3600 L
Rear bin	56%	4600	4600 L
Total capacity		8200	8200 L

By weight:

Front bin (wheat)	3060	3060kg
Rear bin (super)	5330	5330kg
Total weight	8390	8390kg

(wheat = 850kg/1000 litres

(super = 1160kg/1000 litres)

Bin Capacity 3 Bin (Non-packed)

By volume:

Front bin	44%	3600	3600 L
Middle bin	24%	1950	1950 L
Rear bin	32%	2650	2650 L
Total capacity		8200	8200 L

Wheels

Size:

	1880FT	***1880RT***
Front tyre (dual)	----	340/80 R18
Front tyre (CTS/CTC)	----	15.5/80-24
Rear tyres	23.1-30	23.1-30

Type:

Front tyres	Radial/Gripster
Rear Tyres	R1 Gripster

Tyre	**Recommended Pressure**	
	kPa	psi
340/80 R18 Radial	140	20
15.5/80-24(12pr) Gripster	140	20
23.1-30 (8pr) Gripster	170	25

Refer to page 13 for Hydraulic, Variator and Drive System Specifications.

Dimensions	***1890FT***	***1890RT***
Overall width	3620	3620mm
Overall height*	3160	3160mm
Top of bin height	3000	3000mm
Overall length^	6375	10,250mm
Seeder length	6375	5870mm
Rear wheel centres	3010	3010mm
Front wheel centres (CTS & CTC)	-	3000mm
Step height	530	530mm
Ground Clearance	440	595mm

*Worklight stand folded down. ^Includes hitch but no options

Weights*

Unloaded	3090	3090kg
Loaded	12,500	12,500kg

(material in both bins at 1000kg/1000 litres)

*Weights are for 2 bin models only and excludes Auger and options.

Bin Capacity 2 Bin

By volume:

Front bin	44%	4050	4050 L
Rear bin	56%	5150	5150 L
Total capacity		9200	9200 L

By weight:

Front bin (wheat)	3440	3440kg
Rear bin (super)	5970	5970kg
Total weight	9410	9410kg

(wheat = 850kg/1000 litres

(super = 1160kg/1000 litres)

Bin Capacity 3 Bin (Non-packed)

By volume:

Front bin	44%	4050	4050 L
Middle bin	25.5%	2360	2360 L
Rear bin	30.5%	2850	2850 L
Total capacity		9260	9260 L

Wheels

Size:	***1890FT***	***1890RT***
Front tyre (dual)	----	Not available
Front tyre (CTS/CTC)	----	15.5/80-24
Rear tyres	23.1-30	23.1-30

Type:

Front tyres	Gripster
Rear Tyres	R1 Gripster

Tyre	**Recommended Pressure**	
	kPa	psi
15.5/80-24(12pr) Gripster	140	20
23.1-30 (8pr) Gripster	170	25

Refer to page 13 for Hydraulic, Variator and Drive System Specifications.

Dimensions	***2120FT***	***2120RT***
Overall width	4010	4010mm
Overall height*	3415	3415mm
Top of bin height	3305	3305mm
Overall length^	7245	11,200mm
Seeder length	7245	7020mm
Front wheel centres	-	3000mm
Rear wheel centres	3240	3240mm
Step height	540	540mm
Ground Clearance	380	595mm

*Worklight stand folded down. ^Includes hitch but no options.

Air Seeder Weight*

Unloaded	4400	4700kg
Loaded	16,800	17,375kg

(material in all 3 bins at 1000kg/1000 litres)

*Weights for 3 bin model not including an Auger

Bin Capacity 2 Bin

By volume:

Front bin	44%	5500	5500 L
Rear bin	56%	6900	6900 L
Total capacity		12,400	12,400L

By weight:

Front bin (wheat)	4675	4675kg
Rear bin (super)	8000	8000kg
Total weight	12,675	12,675kg

(wheat = 850kg/1000 litres

(super = 1160kg/1000 litres)

Bin Capacity 3 Bin (Non-packed)

By volume:

Front bin	43.5%	5500	5500 L
Middle bin	25%	3150	3150 L
Rear bin	31.5%	3950	3950 L
Total capacity		12,600	12,600L

Wheels

Size:	***2120FT***	***2120RT***
Front tyre (quad)	----	18.4-30
Rear tyres	30.5L-32	30.5L-32

Type:

Front tyres	R1 Gripster
Rear Tyres	R1 Gripster

Tyre	**Recommended Pressure**	
	kPa	psi
18.4-30 (8pr) Gripster	140	20
30.5L-32 (12pr) Gripster	180	26

Refer to page 13 for Hydraulic, Variator and Drive System Specifications.

Dimensions	***2120FT***	***2120RT***
Overall width	4010	4010mm
Overall height*	3415	3415mm
Top of bin height	3305	3305mm
Overall length^	7245	11,200mm
Seeder length	7245	7020mm
Front wheel centres	-	3000mm
Rear wheel centres	3240	3240mm
Step height	500	500mm
Ground Clearance	380	595mm

*Worklight stand folded down. ^Includes hitch but no options.

Air Seeder Weight*

Unloaded	4350	4800kg
Loaded	18,460	18,910kg

(material in all 3 bins at 1000kg/1000 litres)

*Weights for 3 bin model not including an Auger

Bin Capacity 1 Tank (2 X2500L) & 2 Bin

*By volume:**(Non-packed)***

Front tank	41%	5000 L	5000 L
Middle bin	26%	3150 L	3150 L
Rear bin	33%	3950 L	3950 L
Total capacity		12,100	12,100L

By weight:

Fresh Water Tank	500	500kg
Front tank	6600	6600kg
Front bin (super)	3650	3650kg
Rear bin (wheat)	3360	3360kg
Total weight	14,110	14,110kg

(wheat = 850kg/1000 litres
(super = 1160kg/1000 litres)
(UAN=1320/1000 litres)

Wheels

Size:	***2120FT***	***2120RT***
Front tyre (quad)	----	18.4-30
Rear tyres	30.5L-32	30.5L-32

Type:

Front tyres	R1 Gripster
Rear Tyres	R1 Gripster

Tyre	**Recommended Pressure**	
	kPa	psi
18.4-30 (8pr) Gripster	140	20
30.5L-32 (12pr) Gripster	180	26

Refer to page 14 for Hydraulic, Variator and Drive System Specifications.

Dimensions	*2150FT*	*2150RT*
Overall width	4300	4300mm
Overall height*	3700	3700mm
Top of bin height	3590	3590mm
Overall length^	7245	11,200mm
Seeder length	7245	7020mm
Front wheel centres	-	3000mm
Rear wheel centres	3390	3390mm
Step height	580	580mm
Ground Clearance	380	595mm

*Worklight stand folded down. ^Includes hitch but no options.

Air Seeder Weight*

Unloaded	4750	5300kg
Loaded	20,560	20,600kg

(material in all 3 bins at 1000kg/1000 litres)

*Weights for 3 bin model not including an Auger

Bin Capacity 2 Bin

By volume:

Front bin	44%	6700	6700 L
Rear bin	56%	8450	8450 L
Total capacity		15,150	15,150L

By weight:

Front bin (wheat)	5700	5700kg
Rear bin (super)	9800	9800kg
Total weight	15,500	15,500kg

(wheat = 850kg/1000 litres

(super = 1160kg/1000 litres)

Bin Capacity 3 Bin (Non-packed)

By volume:

Front bin	44%	6700	6700 L
Middle bin	25%	3800	3800 L
Rear bin	31%	4800	4800 L
Total capacity		15,300	15,300L

Wheels

Size:

Front tyre (quad)	----	23.1-30
Rear tyres	900/60-R32	900/60-R32

Type:

Front tyres	R1 Gripster
Rear Tyres	R1 Gripster

Tyre	**Recommended Pressure**	
	kPa	psi
23.1-30 (8pr) Gripster	140	20
900/60-R32 Radial	240	35

Hydraulics

Fan Motor type..... fixed displacement
..... axial-piston

Connections..... pressure inlet/main return outlet/case drain outlet

Hydraulic capacity.. 44.3 l/min. @ 4500rpm
(Ground Drive) (4 outlet meterbox)
..... or 54 l/min. @ 4500rpm (6 outlet meterbox)

Hydraulic capacity…65 l/min. @ 4500rpm
(VRT Hydraulic) (4 outlet meterbox)
or……75 l/min. @ 4500 rpm (6 outlet meterbox)

Fan Speed control.. pressure compensated flow control valve

Filter capacity..... 100 l/m @ 10 microns absolute med. viscosity

Maximum case drain pressure..... 5 Bar (72.5 psi)

Maximum motor pressure..... 350 Bar (5075 psi)

Maximum return line oil temp..... 90° C max.

Hydraulic fluid ..... Mobil fluid 424 or equivalent High quality High VI multigrade transmission and hydrostatic tractor oil.

Drive System - (Ground Drive)

Clutch .....electro-magnetic
Chain .....½ ASA 40
Sprockets.....Nylon/steel
Bearing lubrication .....Mobil HP grease
.....(general purpose)

Variator – (Ground Drive)

Type.....Stepless variable speed
Oil .....Mobil Delvac 1240 D or SAE 40 motor oil
Oil capacity .....1.27 litres
(level with centre of top shaft)

Dimensions	***2150FT***	***2150RT***
Overall width	4300	4300mm
Overall height*	3700	3700mm
Top of bin height	3590	3590mm
Overall length^	7245	11,200mm
Seeder length	7245	7020mm
Front wheel centres	-	3000mm
Rear wheel centres	3390	3390mm
Step height	580	580mm
Ground Clearance	380	595mm

*Worklight stand folded down. ^Includes pull but no options.

Air Seeder Weight*

Unloaded	4850	5400kg
Loaded	18,950	19,500kg

(material in all tanks/bins at 1000kg/1000 litres)

*Weights not including an Auger

Bin Capacity 1 Tank (2x2500L) & 2 Granular Bins

*By volume:**(Non-packed)***

Front tank	37%	5000	5000 L
Middle bin	28%	3800	3800 L
Rear bin	35%	4800	4800 L
Total capacity		13,600	13,600L

By weight:

Fresh Water Tank	500	500kg
Front tank	6600	6600kg
Middle bin (super)	4400	4400kg
Rear bin (wheat)	4080	4080kg
Total weight	15,580	15,580kg

(UAN=1320/1000 litres)
(wheat = 850kg/1000 litres
(super = 1160kg/1000 litres)

Wheels

Size:	***2150FT***	***2150RT***
Front tyre (quad)	----	23.1-30
Rear tyres	900/60-R32	900/60-R32

Type:

Front tyres	R1 Gripster
Rear Tyres	R1 Gripster

Tyre	**Recommended Pressure**	
	kPa	psi
23.1-30 (8pr) Gripster	140	20
900/60-R32 Radial	240	35

Hydraulics

Fan Motor type.....fixed displacement
..... axial-piston

Connections.....pressure inlet/main return outlet/case drain outlet

Hydraulic capacity…

Blower……(VRT Hydraulic)
max. 75 l/min. @ 4500 rpm
(6 outlet meterbox)

Plus

Liquid Pump Drive….30 l/min. @ 500 rpm
(on separate circuit)

Total……105 l/min. (max.)

Fan Speed control ..pressure compensated flow control valve

Filter capacity.....100 l/m @ 10 microns absolute med. viscosity

Maximum fan case drain pressure.....5 Bar (72.5 psi)

Maximum fan motor pressure.....350 Bar (5075 psi)

Maximum return line oil temp .....90° C max.

Hydraulic fluid .....Mobil fluid 424 or equivalent High quality High VI multigrade transmission and hydrostatic tractor oil.

Drive System - (VRT)

Meterbox Drive ..... Hydraulic motors
Chain ..... ½ ASA 40
Sprockets..... Nylon
Bearing lubrication ..... Mobil HP grease
..... (general purpose)

SPECIFICATIONS – LEVEL BIN VOLUME

			POSITION ON BIN (REFER FIG. BELOW)				
	CONFIGURATION	***BIN***	**TOP**	**TOP FOLD**	**MID POINT**	**BOTTOM FOLD**	**BIN JOIN**
1860	2 BIN	FRONT	2770L	2215L	1456L	700L	535L
		REAR	3450L	2783L	1821L	860L	655L
	3 BIN (FLAT PANEL)	FRONT	2770L	2215L	1456L	700L	535L
		MIDDLE	1824L	1404L	923L	442L	340L
		REAR	1926L	1506L	1025L	544L	442L
	3 BIN (DISHED PANEL)	FRONT	2770L	2783L	1456L	700L	535L
		MIDDLE	1702L	1282L	862L	442L	340L
		REAR	2048L	1628L	1086L	544L	442L
1880	2 BIN	FRONT	3629L	2627L	1848L	890L	517L
		REAR	4647L	3410L	2358L	1127L	646L
	3 BIN	FRONT	3629L	2627L	1848L	890L	517L
		MIDDLE	2099L	1732L	1176L	586L	347L
		REAR	27034L	1994L	1335L	692L	450L
1890	2 BIN	FRONT	4064L	3062L	2066L	890L	517L
		REAR	5206L	2627L	2638L	1127L	646L
	3 BIN	FRONT	4064L	3062L	2066L	890L	517L
		MIDDLE	2370L	1842L	1316L	586L	347L
		REAR	2987L	2278L	1472L	692L	450L
2120	2 BIN	FRONT	5534L	3766L	2672L	1519L	1005L
		REAR	6911L	4744L	3378L	1916L	1263L
	3 BIN	FRONT	5534L	3766L	2672L	1519L	1005L
		MIDDLE	3177L	2295L	1746L	1049L	719L
		REAR	3980L	2695L	1877L	1113L	789L
	1+2 BIN (LIQUID)	FRONT	5000L	-	-	-	-
		MIDDLE	3177L	2295L	1746L	1049L	719L
		REAR	3980L	2695L	1877L	1113L	789L
2150	2 BIN	FRONT	6728L	4960L	3287L	1519L	1005L
		REAR	8468L	6301L	4156L	1916L	1263L
	3 BIN	FRONT	6728L	4960L	3287L	1519L	1005L
		MIDDLE	3859L	2984L	2109L	1049L	719L
		REAR	4854L	3563L	2293L	1113L	789L
	1+2 BIN (LIQUID)	FRONT	5000L	-	-	-	-
		MIDDLE	3859L	2984L	2109L	1049L	719L
		REAR	4854L	3563L	2293L	1113L	789L

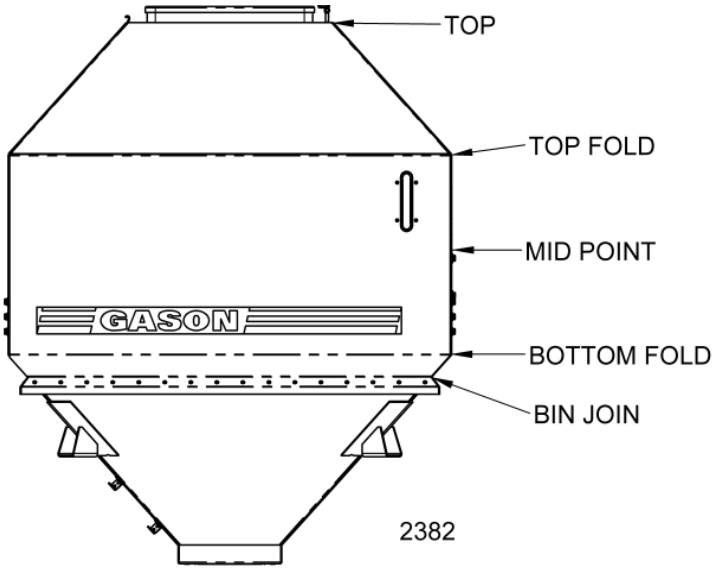

Note:

Volumes are for reference only.

Volumes refer to flat water capacity at the various levels shown. When filling, material may peak and not flow into rear bin corners.

Volume of 23 L removed from under centre platform on 2120/50 & 1880/90 to account for material repose.

Volumes do not include meterbox capacity.

Useful Conversions – Formulae

LENGTH:	1 km	= 0.621371 mile	1 mile	= 1.609344 km
	1 m	= 3.280840 ft.	1 ft	= 0.304800 m
	1 mm	= 0.039390 inch	1 inch	= 25.400 mm
SPEED:	1km/h	= 0.625 mph		
AREA:	1 ha	= 10,000 m^2 = 2.471054 acres		
	1 acre	= 10 sq. chain = 4840 sq. yd. = 0.404685ha		
	1 km^2	= 0.386102 sq. mile	1 sq. mile	= 2.589988 km^2
VOLUME:	1 m^3	= 35.31476 cu. Ft.	1 cu. ft.	= 0.028317 m^3
	1 L	= 0.26418 US gal.	1 US gal.	= 3.78531 L
	1 UK gal = 1.201 US gal.			
	1 UK Bushel = 8.00 UK gal. = 1.2843 cu. Ft.			
	1 L	= 0.0274962 UK Bushel	1 UK Bushel = 36.369 L	
	1 L	= 0.0283785 US Bushels	1 US Bushel = 35.2379 L	
TORQUE:	1 Nm	= 0.7375624 lbft.	1 lbft.	= 1.3558175 Nm
FORCE:	1 lbf	= 4.4482 N	1N	= 0.22481 lbf
PRESSURE:	1 psi	= 6.89476 kPa = 0.0689476 Bar		
	1 kPa	= 0.145038 psi = 0.01 Bar		
	1 Bar	= 14.5 psi		
MASS:	1 kg	= 2.204622 lb	1 lb	= 0.453592 kg
	1 kg	= 1000 grams		
POWER:	1 kW	= 1.341 hp	1 hp	= 745.7 W
DENSITY:	1 kg/m^3	= 0.0624 lb/ft^3	1 lb/ft^3	= 16.0185 kg/m^3
APPLICATION RATE:	1 kg/ha	= 0.892 lb/acre	1 lb/acre	= 1.121 kg/ha

HYDRAULIC HORSE POWER:

$$1\ hp = \frac{FLOW\ (US\ GPM) \times PRESSURE\ (psi)}{1714}$$

MASS FLOW RATE:

$$kg/min = \frac{Application\ Rate\ (kg/ha) \times Area\ Rate\ (ha/hour)}{60}$$

$$lb/min = \frac{Application\ Rate\ (lb/acre) \times Acre\ Rate\ (acre/hour)}{60}$$

STANDARD BOLT HEAD MARKINGS AND TORQUE SPECIFICATIONS:

CAUTION: Loose bolts can cause elongation of holes and part failures resulting in dangerous operating conditions and equipment breakdown. Check all bolts and nuts periodically during equipment operation and keep them tightened to the specified torque. If hardware replacement becomes necessary, replace with equivalent metric grade number.

NOTE: The following torque figures are those recommended for zinc plated, lightly oiled bolts. Recommended assembly torques may be obtained by multiplying the torque figures in the table below by:

0.78 – for degreased zinc plated bolts
1.10 – for black oxide finished bolts
0.81 – for M20x2.5P Tine Toolbar Hardware

It is necessary that all bolts be tightened to the correct recommended assembly torque.

Size	Thread Pitch	Recommended Assembly Torque					
		lbf.ft	Nm	lbf.ft	Nm	lbf.ft	Nm
S.A.E Grade Number		**5**		**8**		**Wheel Stud**	
Head Markings (Manufacturers marks may vary)		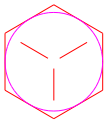		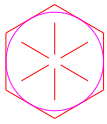			
7/16	UNF	43	59	60	82	-	-
7/16	UNC	39	53	54	74	-	-
1/2	UNF	67	91	94	128	-	-
1/2	UNC	59	81	83	113	-	-
5/8	UNF	135	184	186	253	-	-
5/8	UNC	117	159	165	224	-	-
3/4	UNF	235	319	325	441	-	-
3/4	UNC	210	285	290	394	-	-
7/8	UNF	370	502	520	706	-	-
7/8	UNC	335	455	470	638	-	-
1	UNF	550	746	775	1052	-	-
1	UNC	505	685	710	963	-	-

Metric Grade Number		8.8		10.9		Wheel Stud	
Head Markings (Manufacturers marks may vary)				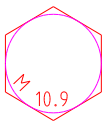			
M10	1.5	29	40	41	56	-	-
M12	1.75	51	70	73	100	-	-
M16	-	-	-	-	-	170	231
M16	2.0	126	171	180	245	-	-
M18	-	-	-	-	-	254	345
M20	-	-	-	-	-	376	510
M20	2.5	247	335	351	477	-	-
M22	-	-	-	-	-	475	645
M24	-	-	-	-	-	500	679
M24	3.0	425	577	608	825	-	-

When Ordering Parts:

The following information must be supplied to facilitate fast and accurate processing of a replacement parts order:-

- Gason part number and description (as given in this manual)
- Quantity
- Machine model and serial number
- Method of despatch.
- Your Dealers name and address

For your convenience record the following information below:

Name:_____

_____

Address: _____

_____

Telephone Number: _____

Machine Model No:_____

Date Machine Purchased: _____

Serial No.:_____

1118

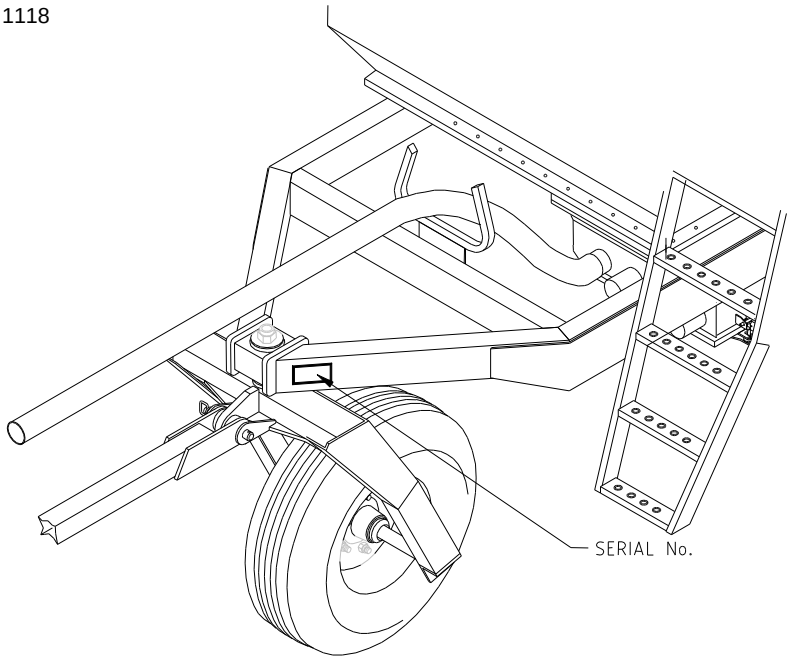

Serial No. tag at left front of trailer frame

Subject to any applicable Federal, State or Territory laws or ordinances, which may apply from time to time, A. F. Gason Pty Ltd reserves the right to make changes in design and specifications without notice or obligation and to change or discontinue models at any time without incurring any liability to any Purchaser thereof.

Left and right hand: All references in this manual are determined by facing the direction of travel.

For warranty provisions please consult your Installation and Warranty Registration document.

SPARE PARTS RECORD

PART No.	*DESCRIPTION*	*QTY.*	*COST*	*DATE*

Seeder to Implement Hitch to Suit 1860RT –CTC (Control Traffic Castor)

The implement hitch on the CTC model seeder must be mounted at the rear of the bar. The 2 extension beams that protrude rearward can be spaced to clear tines and other implement structure but should be symmetrical about the implement centre-line.

The cross beam can then be bolted to the extension beams. The ‘A’ frame pull is pinned in 2 places to the cross beam. The spring mechanism should be fitted to hold the ‘A’ frame pull off the ground to allow the implement to be manoeuvred without the seeder attached. (refer Fig. A5).

The extension beams may require some modification if being fitted to a non-Gason implement. It is important that the extension beams are securely fastened at both the rear row of the implement and one row forward as shown in Fig.A5. Extension beams are also available to suit the CT2 Gason implement.

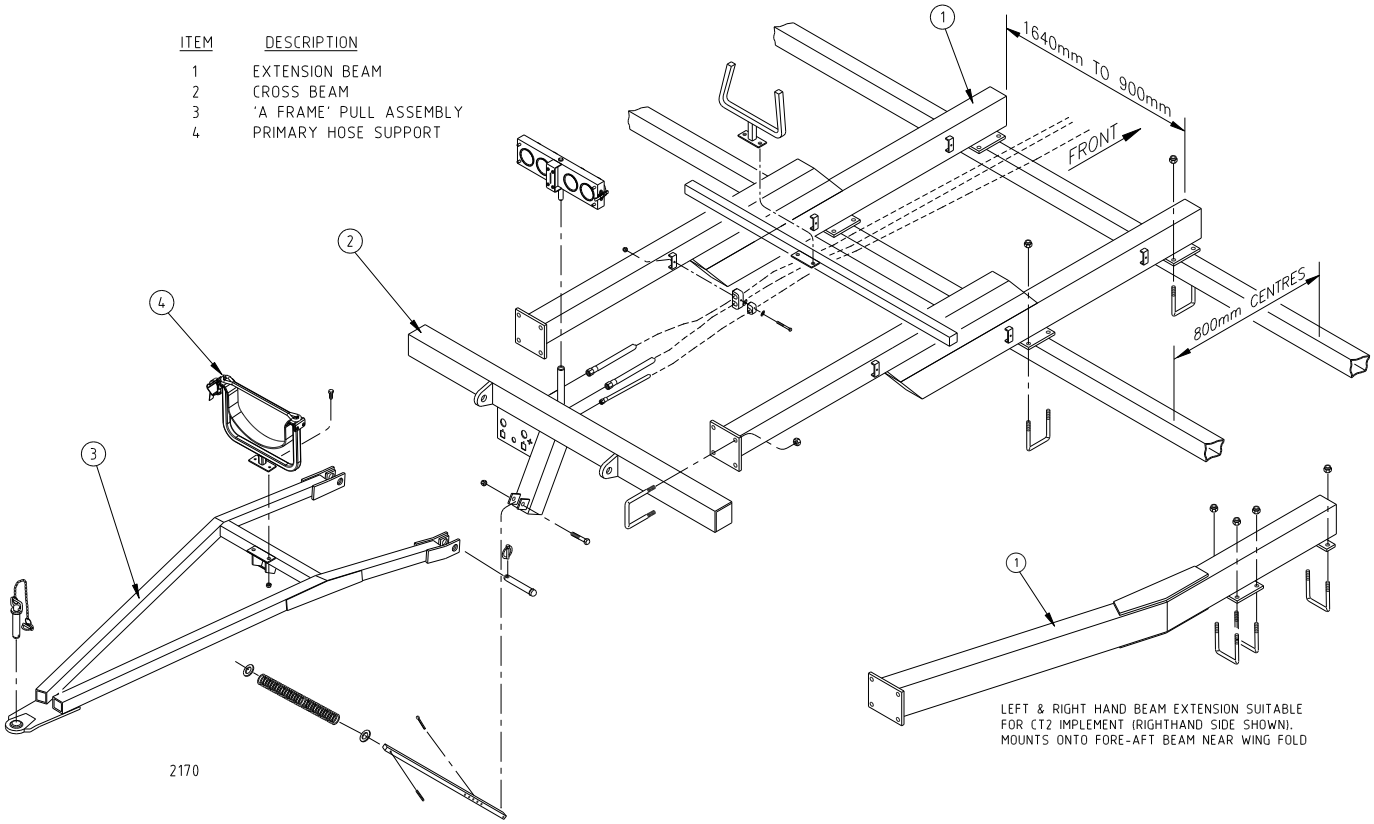

Fig.A5 1860RT-CT Implement Hitch.

Seeder to Implement Hitch to Suit 1880RT

The 1880RT seeder uses a rigid 'A frame' pull that is mounted to the rear of the implement. It is self-supporting and can be left on the implement for manoeuvring purposes. The following steps should be used to help in fitment.

Step 1. Locate vertical support brackets on the rear row of the implement at approximately 2800mm width about the implement's centreline. This can be altered to suit your specific implement and tine layout.

Step 2. Fit the braces and support brackets that run forward to the second last row. If possible splay the braces out so that they will help take the load when turning. (Refer Fig. A9).

Step 3. Fit the 2 pull arms, separately, to the vertical supports using the clevis pins supplied.

Step 4. Lift 1 arm at a time pivoting about the vertical support pin and slide spring support up through the square tube slide on the outside of the arm. Fit the small pin at the base of the spring mechanism to hold arm horizontal. Repeat for second arm.

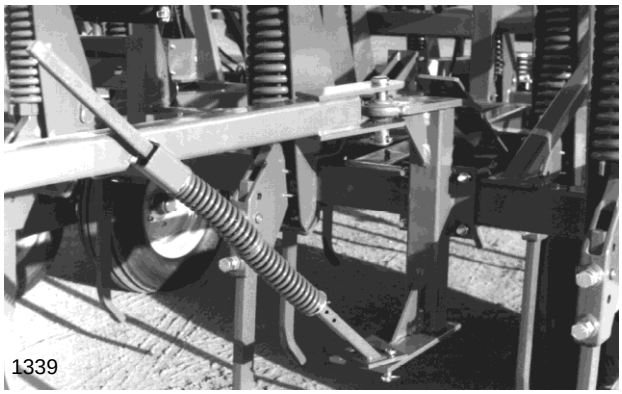

Fig. A6 Spring Support.

Step 5. Join the two arms together at the rear shutting them like a gate. You may need to rest the central bar in the pull arm extension (refer Fig. A7) to help flatten the left hand arm and use the handle attached to the rear of the right hand arm to level that side.

Fig. A7 Operation of handles.

Step 6. Refit the central bar (item 6 in Fig. A9) between the arms sliding the mounts along until its position is perpendicular to the centreline of the machine.

Step 7. Fit primary coupling support bracket centrally on the rear bar of the implement.

Step 8. Fit the primary hose supports to the front of the seeder and the centre of the 'A frame' bar. Unit is now ready for the primary hoses to be fitted.

On some model implements it may be necessary to use an adapter bracket to raise the primary hose coupling. Refer to the options section in the Parts Manual.

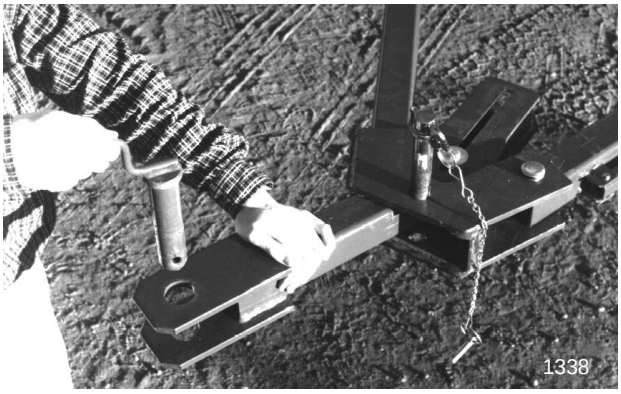

Fig.A8 Pull Arm Extension.

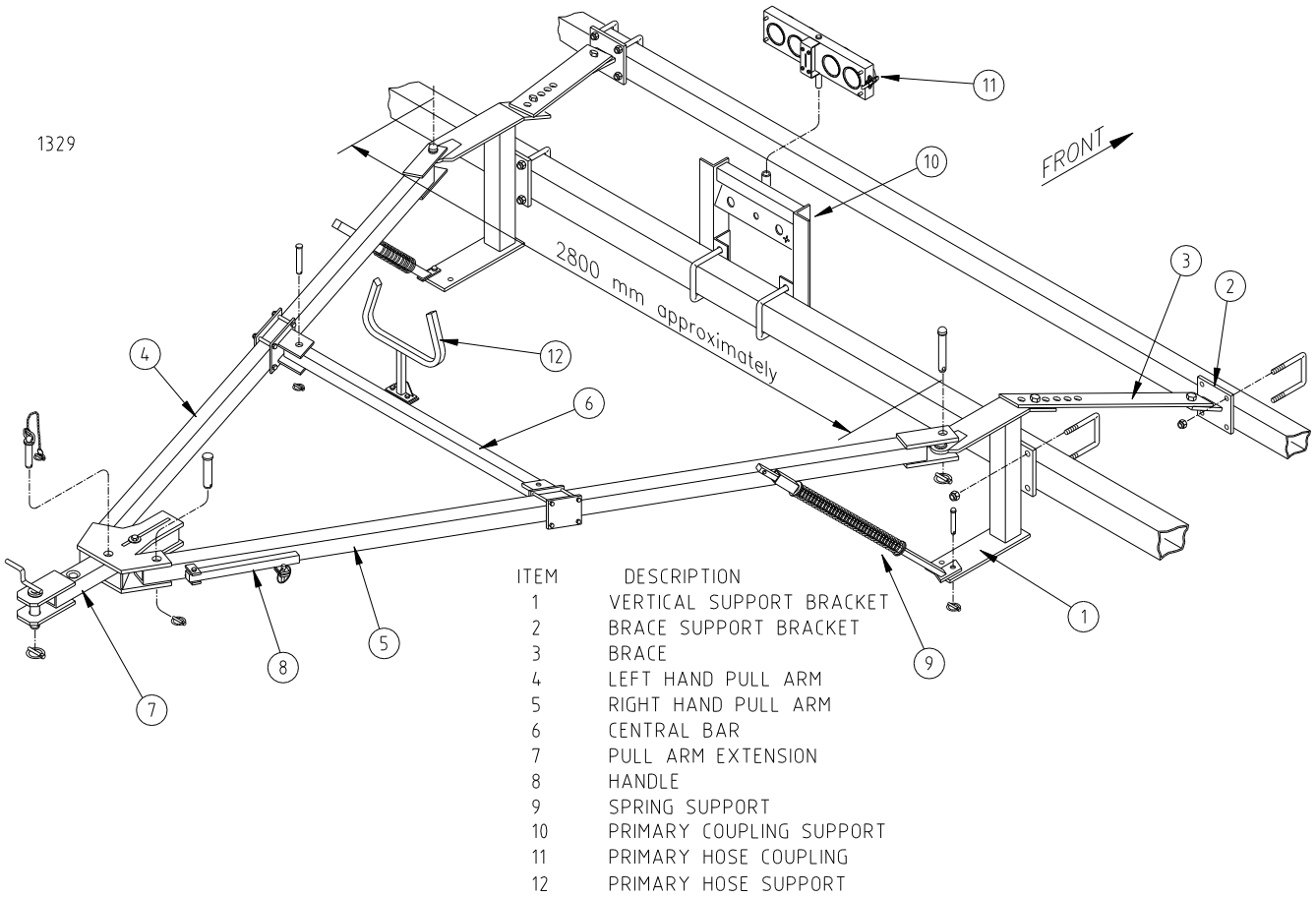

Fig. A9 Rigid 'A Frame' as used on the 1880RT.

Seeder to Implement Hitch to Suit 1880/90RT CTS (Control Traffic Steerable) and 2120/50RT

The implement hitch on the 1880/90RT-CTS and 2120/50RT model seeders must be mounted at the rear of the bar. The 2 extension beams that protrude rearward can be spaced to clear tines and other implement structure but should be symmetrical about the implement centreline. (refer Fig. A10).

The cross beam can then be bolted to the extension beams. Hydraulic hoses can be secured to one of the extension beams and connected to the central plate.

The 2120/50RT models also require the fitting of a bracing structure. Two short extension beams are to be mounted either side of the main extension beams and joined together with 2 connector bars. The bars can be adjusted to suit the location of the beams.

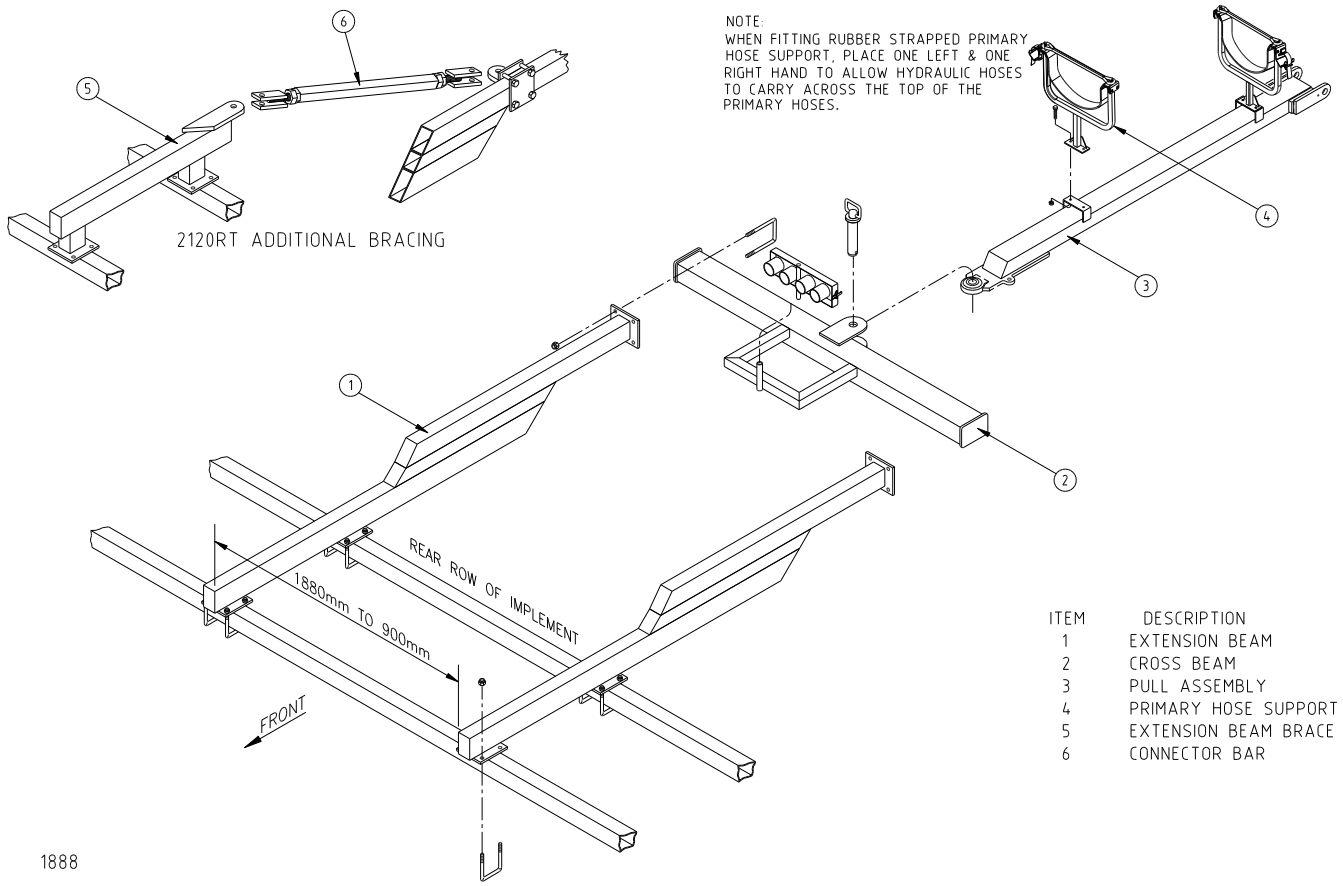

Fig.A10 1880/90RT-CTS and 2120/50RT Seeder to implement hitch.

Fig.A11 2150RT Air Seeder unhitched from implement

Seeder to Implement Hitch to Suit 1880/90RT –CTC (Control Traffic Castor)

Similar to the 1860RT CTC hitch, the A-frame on the 1880/90RT CTC model uses 2 support springs to hold the A-frame up to allow easy connection and disconnection to the implement. Ensure that the extension beams are securely fastened to the two rear rows of the implement within the spacing width shown (refer Fig.A12).

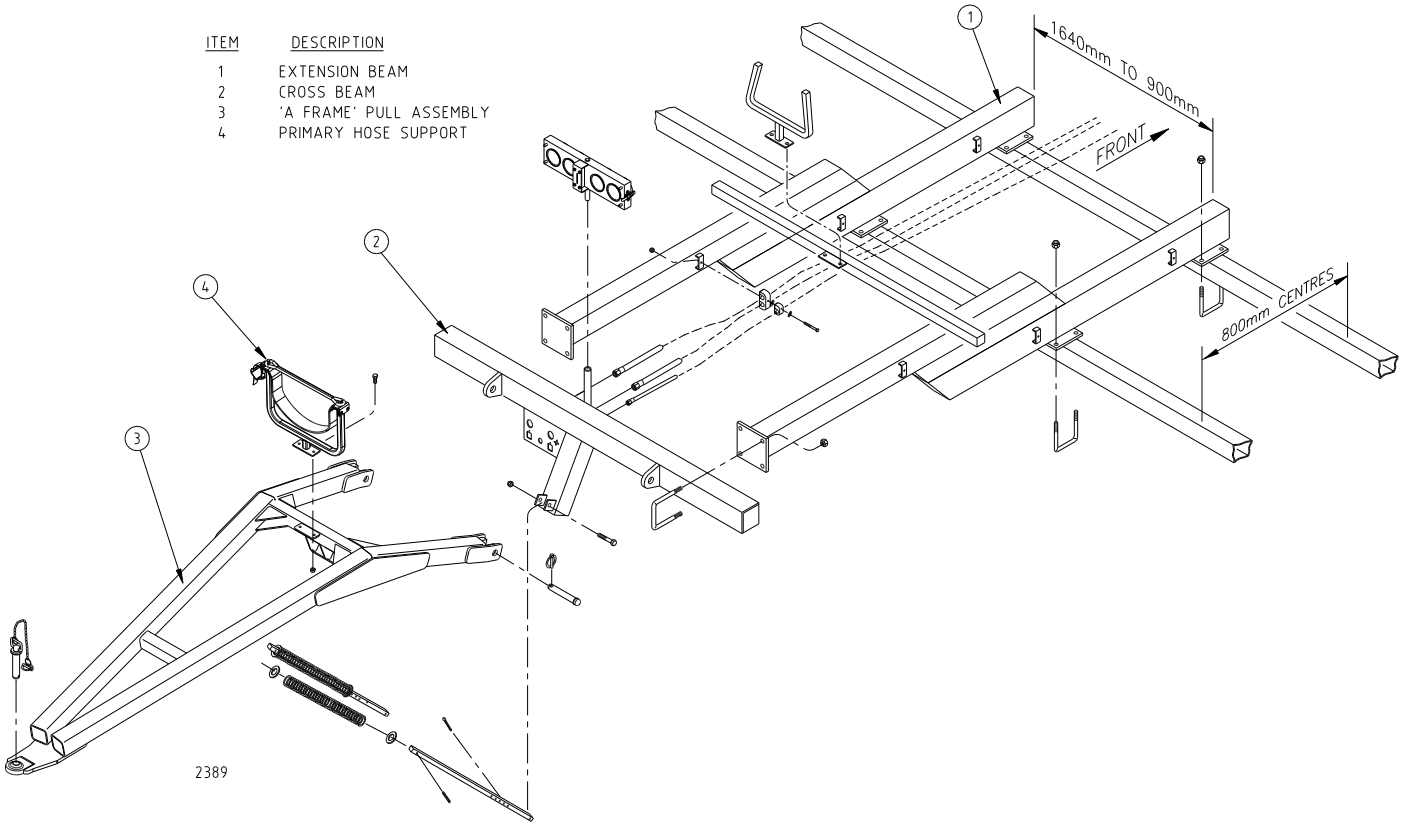

Fig.A12 1880/90RT CTC Hitch frame.

Metering System

If you have informed the dealer of your planting needs at the time of purchase the seeder may already be ready for use. However, if changes need to be made refer to the 'Metering System' section for altering the meter system configuration.

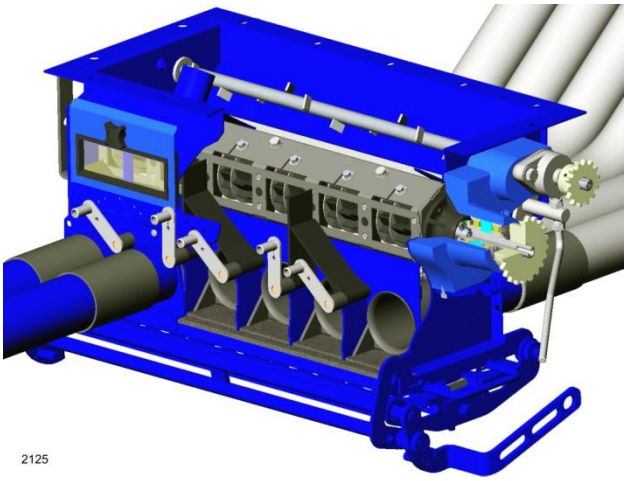

Fig. A13 Meterbox Assembly.

Check all Wheel Nuts

Wheel nuts can work loose in transportation and should be checked before towing. Once the seeder is operating the wheel nuts should again be checked until they have bedded in.

Monitor and Electrical System

The Air Seeder is supplied with a monitor and loom system that will need to be mounted in the tractor cab. Depending on the model and options ordered there should be a couple of monitors, a worklight switch bracket, a clutch switch box (ground drive models only) and other components as required.

Fig. A14 Ground drive Monitor Mounting.

The monitors require 12 volt DC power to operate and must be connected directly to the tractor's battery. Refer to the specific Farmscan Operators Manual as supplied with the monitor for instructions. Read the installation section thoroughly.

NOTE: Incorrect installation of the monitors can affect the operation and performance of the air seeder.

Care must be taken to ensure that the monitor and worklight looms are routed clear of sharp corners and areas that may damage the cable. Cable tie looms into position.

The worklight switch bracket should be fitted as per instructions supplied. The power to operate the lights should come directly from the battery.

NOTE: Please complete your 'Guarantee Registration form' that is supplied in the monitor kit, and mail as per instructions.

Hydraulic System

Before the seeder can be operated it will be necessary to fit the hydraulic hose kit to the implement on RT models, and to have the tractor fitted with the appropriate hoses to return the flow direct to the tank for all seeders. Refer to the 'Hydraulic System' section in this manual for further details.

Distribution System Introduction

The distribution system consists of primary, secondary and tertiary stages. Components for each stage must be fitted to the implement (refer Fig. A15).

The distribution system is supplied as a kit and is fitted once the implement has been fully assembled.

A distribution layout drawing is often supplied with a new kit to aid in the placement of components.

It must be remembered that this layout is a guide only and may vary slightly from the actual machine being set-up.

Fitting the Distribution Kit

Step 1. Locate all secondary head support stands, heads and primary splitters into position using the layout supplied with the kit as a guide.

Step 2. Slowly and carefully fold the wings on the implement observing that all secondary heads clear the frame work and each other. Remember to allow room for the tertiary hoses. Reposition if a clearance problem has occurred.

Step 3. Fit the tertiary hoses to check that the secondary head support towers are suitably located and that all sowing boots can be reached.

Step 4. Again slowly and carefully fold the wings on the implement observing that all tertiary hoses clear framework and each other. Reposition if a clearance problem has occurred.

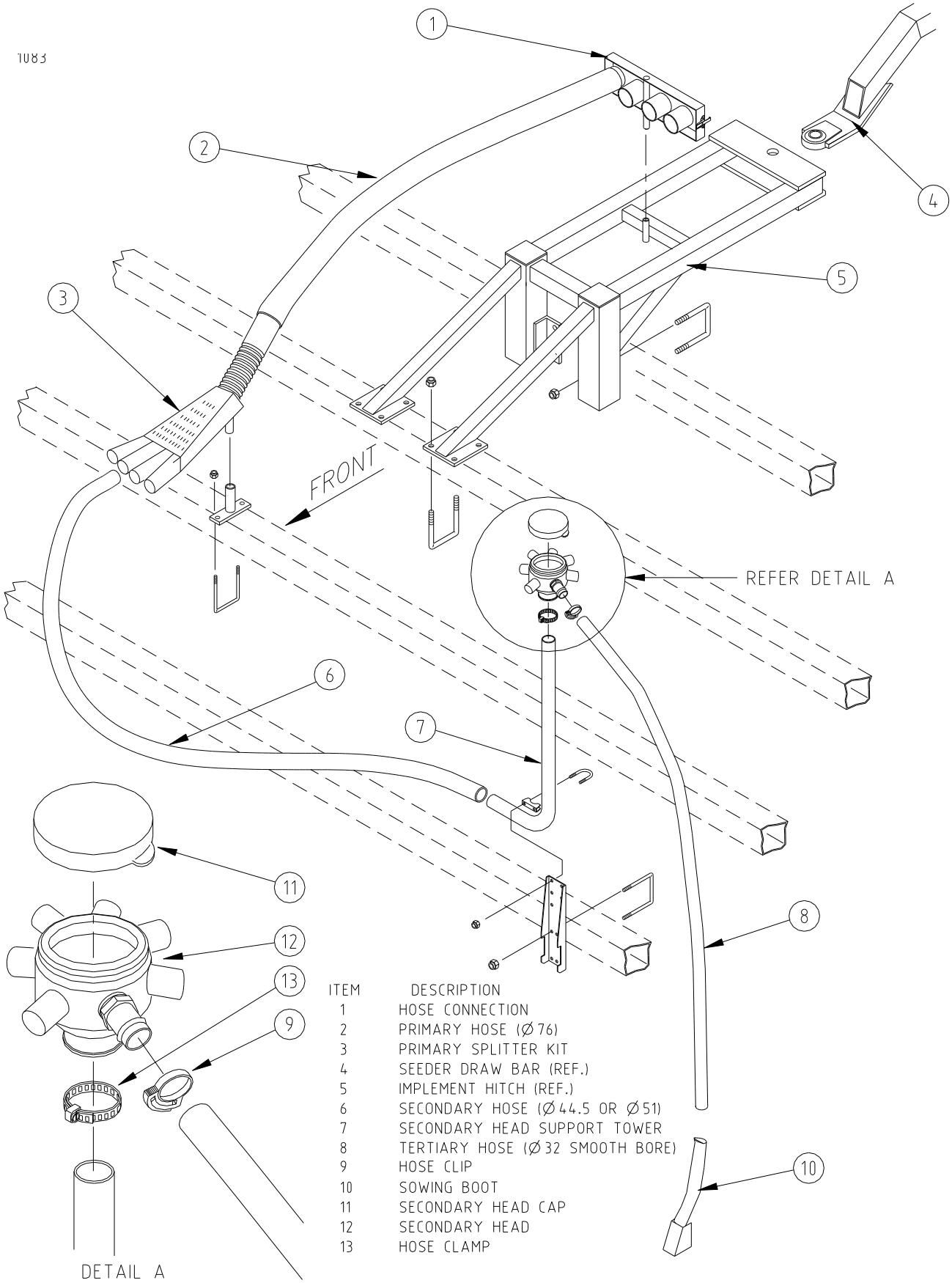

Fig. A15 Distribution Layout.

Step 5. Fit all primary and secondary hoses. Ensure that there are no sharp turns and that the hoses stay as level as possible.

A level and smooth fitting of hoses will help prevent blockages from occurring, and extend the life of the hose.

Use the large plastic ties to prevent hoses from sagging or wearing on moving parts.

IMPORTANT

Tertiary hoses when fitted to the secondary heads must fall at a minimum of 10 to 15° angle. The hose fall must be constant and increase as it approaches the sowing boot. Blockages will occur if the tertiary hoses rise or lay flat when leaving the secondary heads.

Fig.A16 Typical fall on tertiary hose.

When choosing a secondary head port to attach the tertiary hose, the installer should ensure that the hose can rotate if a tine jumps (refer Fig A17 & A18). If the hose movement is restricted the tertiary hose will kink.

Tertiary hoses that carry across a wing-fold zone must also be curved to allow for rotation.

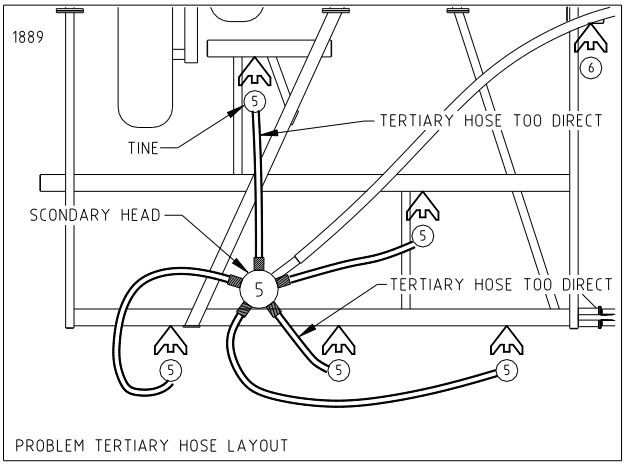

Fig. A17 Poor Tertiary hose routing.

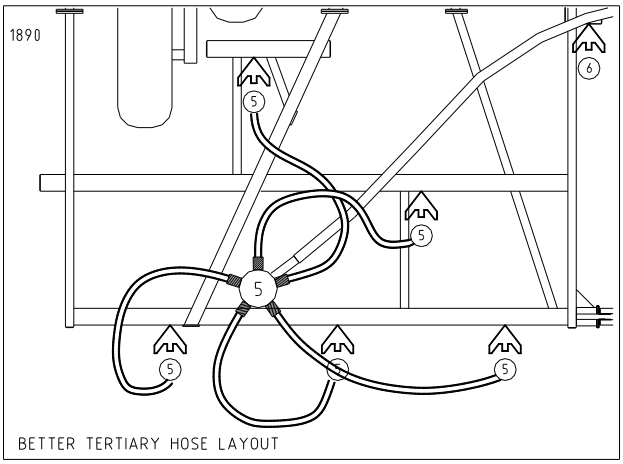

Fig.A18 Good Tertiary hose routing.

Head Blockage Junction Box

The standard Head Blockage sensor is supplied with a junction box to join the relevant wires. It is possible to mount the junction box onto the secondary head support bracket using cable ties (refer Fig.19).

Fig. A19 Junction Box.

Final Pre-Delivery Check List

After the Air Seeder has been assembled and the distribution system fitted to the implement a final check should be carried out before delivery.

Trailer General

1. All wheel nuts tight (refer page 17).
2. Front axle bolts tight (single castor only).
3. Check tyre pressures (refer pages 8-14)
4. Bins clean on inside, no loose items.
5. Implement hitch system is fitted correctly and all fasteners are tight.
6. Calibration tray fitted & scales tested.

Electrical System

1. Check cable routing is clear of corners and that there is enough slack for turning.
2. Check that the installation of the monitor in the tractor is as per the specific monitor's operator's manual.

Ground Drive Metering System

1. Check clutch operation.
2. Set the implement seeding width on the 2200 Surveillance monitor.
3. Check magnetic clutch bolt tight (40Nm).
4. Check correct metering system fitted.
5. All bearings greased (meterbox and drive system including the nose bearing on the metershaft assembly).
6. Meterbox hatches fitted.

Ground Drive Metering System - Cont.

7. Metering system turns freely.
8. Variator adjustment operates.
9. Calibration handle fitted.
10. Metershaft handle fitted.
11. Calibration sample box fitted.
12. All sprockets are aligned and tightened.

VRT Hydraulic Drive Metering System

1. Inspect large aluminium connectors at the breakaway points for damage.
2. Set the implement seeding width factor on the monitor.
3. Check correct metering system fitted.
4. All bearings greased (including the nose bearing on the metershaft assembly).
5. Meterbox hatches fitted.
6. Quick-change sprocket ratio handle fitted.
7. Quick-change sprocket ratio shaft screws are tight (use handle).
8. Calibration sample box fitted.
9. Prime metering system when the tractor is connected to the seeder to test electrical and hydraulic systems.

Distribution System

1. All retaining bolts are tight.
2. All hoses clear of moving parts.
3. Hoses do not sag or turn sharply.
4. Tertiary hoses have constant fall.
5. Hoses clear as wings fold.
6. All secondary head caps fitted.
7. All sowing boot fixings tight.

Transporting the Air Seeder

Once the Air Seeder has been fully assembled it is possible to quickly disconnect it from the implement for transporting.

Before towing on the road you should consult with the appropriate state or local authority for any specific regulations and permits that may be required eg. dimension, weight, time of day and bridge restrictions, area category etc.

Avoid transporting the seeder long distances when loaded. Do not exceed 20km/h when transporting the seeder when loaded. Maximum speed for towing an empty seeder is 40km/h for steerable RT models (CTS) and 20km/h for castor models (CTC). Ensure tyre pressures are as per the specification sheet for the particular seeder size and configuration before towing.

Always shift into low gear when travelling down steep slopes.

DO NOT TOW:

- With the clutch switch engaged.
- At speed over rough ground.
- With any person or persons riding on the machine.
- At night unless lights are fitted and a permit has been issued if required.
- In a dangerous manner that may threaten the safety of any person.

Tips to remember when towing the Air Seeder

1. If towing long distances disconnect the drive system by removing the chain that connects the rear wheel to the clutch shaft drive sprocket on Ground Drive Models (refer Fig. T1).

Fig.T1 Wheel Sprocket on a Ground Drive model.

2. Ensure all seeder primary hoses and hydraulic hoses have been secured to the draw bar.

3. Reduce the pressure in the front tyres, castor model only, to recommended pressure less 20% to reduce the bounce that may occur while transporting. Maximum speed for castor wheel models is 20km/h for CTC models.

4. The tyre manufacturer recommends that you increase the rear tyre pressure to the maximum rating when towing on a hard surface for any extended length of time. This will prevent the Gripster lugs from distorting and rapid wear occurring.

5. Use a draw bar pin that is the correct size and that can be locked into position.

6. Use towing safety chains where applicable.

7. After transporting for a few kilometres, stop and re-tension all wheel nuts. This should be repeated again if transporting an extended distance or if the wheels have just been fitted.

General Information

Before operating the Air Seeder for the first time, check that all components have been fitted and that the machine is ready for use (refer checklist, page 28).

Once the seeder has been connected to the rear or front of the implement it will be necessary to connect the hydraulic breakaway fittings to both the tractor and the implement.

Check that the hydraulic hoses that run along the seeder's draw bar have room to move when the seeder is turning. Use nylon ties if necessary to help retain the hoses.

Connect the primary hoses from the seeder to the rear or front of the implement (refer Fig. O1).

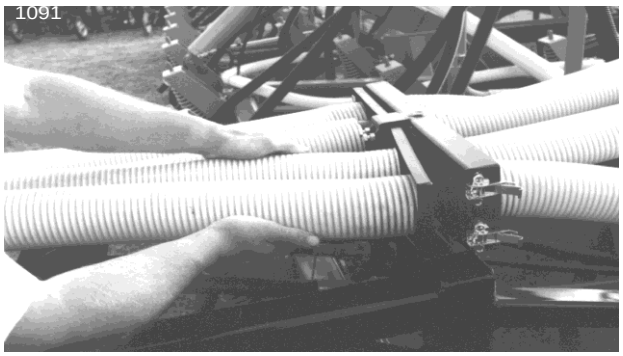

Fig. O1 Primary hoses coupling.

Connect the electrical plugs at both the tractor and implement to operate the monitors, worklights and clutch if fitted.

It will now be necessary to calibrate the metering system to obtain the desired application rate for the particular material being sown. Refer to either the Ground Drive or VRT Hydraulic Drive sections in this manual for the appropriate calibration information.

It will also be necessary to set an appropriate fan speed for your application rate. Refer to the Blower section.

You are now ready to begin your seeding operation.

Filling the Seeder's Bins

In most cases operators will tend to fill the front bin with seed and the rear bin with fertilizer. This can however, be reversed if it suits your loading facility.

Before filling, check that the trap doors on both metering systems have been locked into position, and that there are no modifications needed to the meterbox.

The grates that are fitted to the top of the bin should always be left in place when filling. This will help in preventing large clumps of material and foreign objects from entering the bin and possibly damaging or blocking the meter system.

Never place damp or dusty fertilser in the bin. Damage may occur to the metering system.

To Empty the Bin

Remove the bottom meterbox hatch. Place a suitable container or unloading auger underneath the bin and operate the meterbox trap door.

To ensure all of the bin's contents has been removed it is recommended that you rotate the metershaft one full revolution. This should clear the metering system of any product in that area.

Use a broom from the top of the bin if any material remains in the bin.

Seeding Operation

To start the seeding operation you need to firstly switch on the monitors that are fitted to the tractor.

Engage the hydraulic system to operate the blower from within the tractor.

While the blower is warming up ***check that the meter shafts turn freely.*** Refer to the “Metering System’ for further details.

IMPORTANT

On cold wet mornings it is recommended that you run the blower at its operating speed for at least 10 to 15 minutes before seeding. This extended start-up time will help dry the distribution system if moisture is present.

It is suggested that the operator does not lower the points of the implement into the ground until the machine is moving. This will help in preventing the sowing boots becoming blocked in muddy conditions.

Engage the clutch on Ground Drive Models or take monitor off hold on VRT Seeders when you wish to apply material. To stop seeding, simply turn the clutch off or place monitor on hold on VRT Seeders. This will disengage the drive system.

Monitor Operation

The monitor system is different for the Ground Drive and VRT equipped seeders.

The operator should read the specific monitor manuals supplied for all technical information on installing and operating the many features of each unit.

Before the monitor can be used the appropriate sowing width needs to be loaded, and for VRT seeders, a calibration procedure performed.

To obtain basic information and the preset values used on your specific model supplied, refer to either the Ground Drive-Monitor Operation section (page 32) or the VRT Hydraulic Drive section (page 64).

1020 Air Seeder Monitor

The main function of this monitor is to show the operator that material is being conveyed through the system to the secondary head and warn against a blockage in that secondary distribution hose.

The monitor should be switched on before operating the seeder. The toggle switch on the front face of the monitor should remain on “RESET”

Fig. O2 Farmscan 1020 Monitor.

Head Blockage Kit

The Gason Air Seeder is supplied with one head blockage sensor (GPN 208651) and harness. This can be expanded to 21 sensors at a later stage if necessary.

To operate, adjust the sensitivity knob while conveying product so that the monitors red light and audible warning stops. If the red light comes on, check for a blockage.

When finely adjusted the light will sometimes flicker when the tractor slows or turns. This is caused by either the material rate dropping off because the drive wheel on the seeder has slowed or fan speed has reduced because of other demands on hydraulic oil flow i.e. steering/implement lift.

The sensitivity of the monitor is such that the system will pick-up this small difference in the material rate or velocity.

Introduction (Ground Drive)

All Gason Ground Drive air seeders are equipped with the Farmscan 2200 Surveillance monitor.

Fig.G1 Ground Drive Seeder Monitors and worklight switch bracket.

The 2200 Surveillance monitor has been configured and loaded with the preset alarm values. The monitor will however require operator input for the calibration width of the cultivator being used.

Setting Implement Width

The calibration width is the actual sowing width in metres. To load this value simply:

- Press the ***'CAL'*** key to display ***'WIDTH'***.
- Press the up or down arrow keys to set the appropriate sowing width in metres.
- Once set press either the speed, area or function keys to close the calibration program.

Monitor Operation

The monitor is linked to an independent clutch switch that engages the metering system and places the monitor either on or off hold.

If the monitor is switched on but the clutch is off, the monitor will repeat the message ***'MONITOR ON HOLD'***. This is simply alerting the operator that the clutch is disengaged and that the trip meter has stopped measuring distance/area covered and that alarms are de-activated.

When the clutch switch is turned on the message ***'MONITOR OFF HOLD'*** will appear once to tell the operator that normal seeding operations have commenced. The monitor will now operate the trip meters as well as any alarms that have been set.

The ***Alarms*** have been given preset values as standard at the factory (refer page 29). All alarms can be reset at any time or removed altogether if desired. Refer to the monitor's handbook for a full explanation of the alarms and their control.

The ***speed, total area*** and ***trip area*** keys have multiple functions and are fully explained in the monitor's handbook.

The ***function*** key on your Gason Air Seeder has been specifically set-up to monitor 6 different areas of operation on the seeder.

1. FAN	Displays the speed of the blower impeller in rpm.
2. SHAFT 1	Shows the speed of the first metershaft in rpm.
3. SHAFT 2	Shows the speed of the second metershaft in rpm.
4. SHAFT 3	Shows the speed of the third metershaft if fitted.
5. PRESSURE	Displays the air pressure in the plenum chamber in kPa.
6. BIN LEVEL	Displays the current bin status . Bin OK will show if product is above all sensors. Bin Low when below at least one sensor.

The different functions are operated by continually pressing the function key. This will allow the operator to go from fan speed to the shaft speeds etc and back again to the fan speed.

The **FAN** function will be required to set the appropriate blower speed. An alarm has been set to alert the operator if the fan is too fast. **DO NOT OPERATE THE FAN ABOVE 4500 RPM.** Check fan speed when seeding has commenced. Fan speeds will often be slightly higher when actually conveying material.

The ***Shaft 1***,***Shaft 2 and Shaft 3*** *(if fitted)* functions will show the speed of the metershaft that is actually metering the seed and fertilizer. Alarms have been preset to warn against slow or high shaft speeds. If after calibrating your seeder you forget to engage the front bin drive sprocket the alarm will sound and be displayed as ***'SHAFT 1 STOPPED'***. This alarm will repeat until the problem has been rectified.

The ***'PRESSURE'*** function will enable the operator to check the system's air pressure at any time. The pressure indicates the conveying performance of the blower. This may not be very useful when first using the air seeder but over time can help in checking your distribution system and even indicate if your have a blockage or major air leak.

Once familiar with the Air Seeder's operating pressure for a particular application rate, you may wish to set the low and high-pressure alarm to warn against a cap or hose coming loose or a blockage while conveying material.

Clutch Switch

A separate clutch switch is supplied that can be mounted independently from the monitors. It also requires its own power separate from the monitor. Do not use the lighter monitor power harness when connecting.

If for some reason the monitors have to be removed, it is still possible to run the clutch switch independently.

Fig. G2 Clutch Switch (single shown).

Preset Values

When you first switch the monitor on, check the setting. The monitor should display "Gason A/S GT 2/3". If the display is different it will be necessary to correct this. Refer to the section titled 'Calibration' default set-up in the Farmscan 2200 Surveillance monitor instructions manual.

Refer to the Farmscan operator's manual if more information is required.

If you need to recalibrate the monitor refer to the monitor's 'Operator's Manual' for details. The following Gason default values have been used to preset your monitor.

WIDTH 00.00m ‣ Operator to Set
WHEEL 0.675m

S1 LO ALM 5RPM
S1 HI ALM.....100RPM
S2 LO ALM 5RPM
S2 HI ALM.....100RPM
S3 LO ALM……..5RPM
S3HI ALM…….100RPM
KPA LO 0.0KPA
KPA HI 0.0KPA
FAN SLOW 2500RPM
FAN FAST.....4550RPM
R/HOLD .....ACTIVE OFF

NOTE: 2 Bin Air Seeders do not require the 'S3' Shaft Alarms. It is suggested that the operator changes both the S3 Low and S3 high alarm value to zero to prevent activation.

Introduction

The calibration procedure involves the rotation of the metering system by hand to simulate the coverage of a certain area. A material sample needs to be collected and weighed to calculate the application rate. There are several ways to calibrate your seeder but only 3 methods will be discussed here. **Method B** is the **most common** and relates to taking a sample equal to 1/20th of a hectare.

When calibrating the machine it must be remembered that only one type of material should be measured at one time. This will require the operator disconnecting the front, middle or rear metering system.

For further information on calibrating a 3 bin machine refer to page 40.

The variator settings may show a slightly different value for the same material output and for this reason each variator should be set independently. For an approximate setting refer to the appropriate 'Variator Setting Guide' (page 41 to 55).

When calibrating ensure that there is enough material in the bins. In most cases 2 bags will be sufficient.

For very low or high rates it may be necessary to make minor adjustments to the metering system. Refer to the Meterbox Assembly section of this manual for further information.

It must be remembered that this style of seeder is dependent upon a correct wheel diameter for its operating accuracy. If this diameter is altered, (e.g. incorrect tyre fitted, wrong tyre pressure or extreme ground conditions), inaccurate metering may occur. Refer 'Method C' for checking the wheel circumference if extremely accurate metering is desired. All data in this section was compiled on medium black worked ground.

IMPORTANT
BEFORE CALIBRATION OR OPERATION, CHECK THAT THE METERING SHAFTS TURN FREELY.

Material in the bin will compact if transported after filling or left over night (especially fertilizers). For this reason, it is important that you check the metering system turns freely before calibrating and operation. Use the handle supplied and fit to the right-hand side of the metershaft (Fig. C1).

DAMAGE MAY OCCUR TO THE VARIATOR IF THE SYSTEM IS NOT CHECKED.

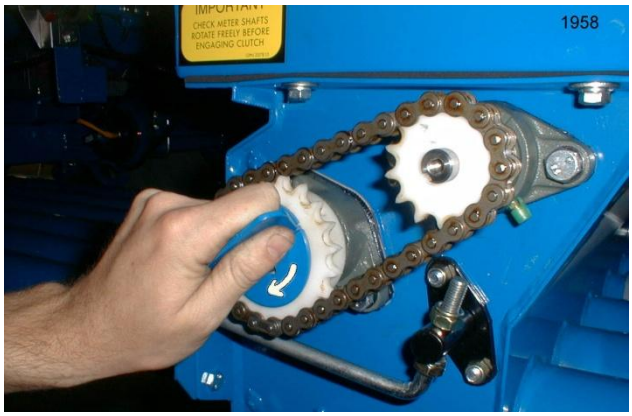

Fig. C1 Checking meter shaft turns freely.

During operation it is important to check that the product being metered is going out at the calibrated rate. Variations may occur if product is damp or material does not flow easily. Check rate is correct by monitoring bin levels while actually seeding.

Method A: For winter rates only.

This is a method that requires no calculations and is suitable for most mid range seeding applications.

By using the 'Calibration Chart' on the side of the seeder bin it is possible to set the metering systems application rate.

For rates less than 20kg/ha or higher than 140kg/ha refer to 'Methods B or C'.

Step 1. Open the meterbox hatch from the bin being tested (Fig. C2).

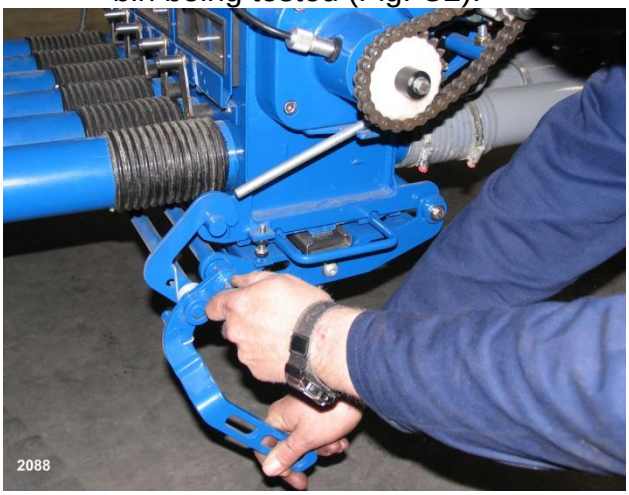

Fig. C2 Removing the meterbox hatch.

Step 2. Fit calibration collection box to rear of meterbox (Fig. C3). The collection box slides along the rear external shelf on the meterbox. The box will only fit one way.

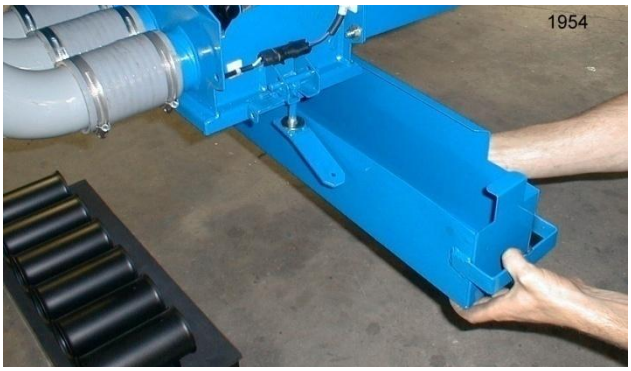

Fig. C3 Fitting the calibration collection box.

Step 3. Disengage drive pin from bin not being calibrated (Fig. C4).

Fig. C4 Disengaging Sprocket.

Refer to page 40 when calibrating a 3 bin seeder or if an isolating clutch has been fitted to a meter shaft.

Step 4. Rotate calibration handle 10 or 20 turns anti-clockwise (follow arrow). For high rates, use 10 turns and for normal winter rates use 20 turns (Fig. C5).

Fig. C5 Calibration handle rotates anti-clockwise.

Step 5. Weigh sample taken on scales supplied. When using scales use the scale box as the container. Place box on top of scales before switching on. Check that the scales are set at zero before weighing sample (Fig.C6).

Fig. C6 Scales.

Step 6. Use calibration chart (on side of the seeder to confirm application. (Refer Fig. C7).

NOTE: It is the responsibility of the operator to check the accuracy of the scales on a regular basis. Refer to the general maintenance section for further information.

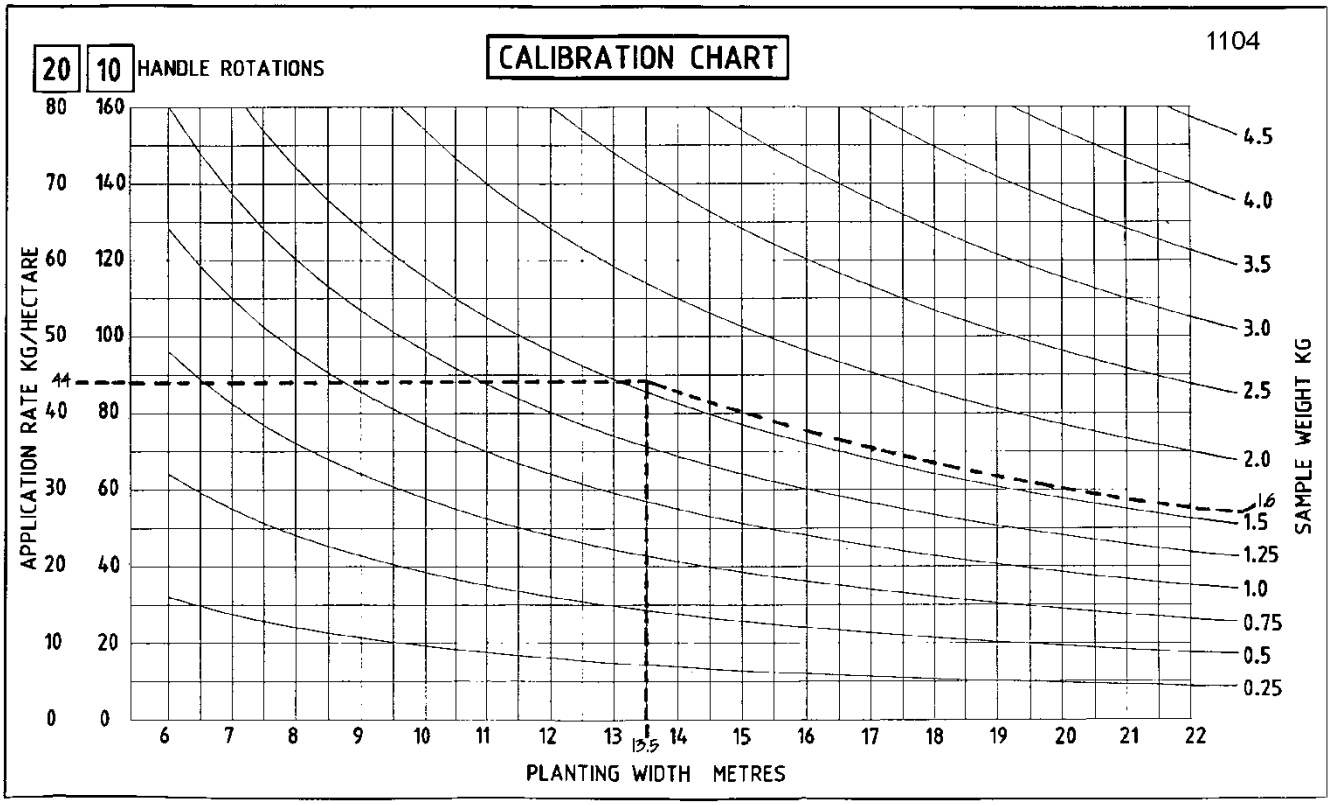

Fig. C7 Calibration Chart Decal.

An example is shown on the calibration chart (Fig. C7), for a planting width of 13.5 metres. In this example, an application rate of 44kg/ha is desired. By following the dotted line up and across we can find the intersection, then follow the curved line down to determine the appropriate sample weight required. In this case 1.6kg sample after 20 turns of the handle.

NOTE: Always use kilograms and hectares when using the chart. Refer 'Conversion Table' (page 58) to convert lb/acre to kg/ha.

Step 7. Adjust setting to obtain correct application rate and re-test. To adjust the setting simply unlock the handle, rotating the handle anti-clockwise, and either increase or decrease the setting.

NOTE: It is recommended that when adjusting the variator setting the operator goes past the desired setting (higher rate) a short distance and then rotates the handle back to the required setting. This method of adjustment will ensure that there is no slack in the cable.

After adjustment lock handle by rotating clockwise (Fig. C8).

Fig. C8 Variator Adjustment.

IMPORTANT When the calibration procedure is completed refit the meterbox hatch and engage the drive pins to allow the drive system to operate normally.

NOTE: Some fertilisers run more freely than others and actual usage may vary from the first calibration sample taken. It is recommended that the operator checks the actual usage after the first bin load. It may be necessary to perform a second calibration test after some material has been metered.

Method B: Preferred method.

To be used when a more accurate application rate is desired or rates that are outside of the charts range of accuracy (less than 20kg/ha or higher than 140kg/ha).

Step 1. Prepare seeder to take sample from either the front, middle or rear bin (refer steps 1 to 3 in 'Method A').

Step 2. Refer to page 56 to determine the correct number of revolutions required to simulate 1/20th of a hectare for the appropriate seeding width in metres.

Step 3. Rotate the calibration handle the correct number of turns for the appropriate seeding width collecting all of the material in the sample box.

Step 4. Weigh the sample collected using the scales supplied and multiply that weight by 20. This figure will be the actual application rate in kg/ha.

Step 5. If the result is too low you will need to increase the setting on the variator. If too much material was collected the reverse applies. After making the adjustment you will need to retest the system following steps 4 and 5.

Example 1

An application rate of 60 kg/ha of wheat is desired on a planting width of 10.0 metres using a 4 outlet meterbox with 3 meterwheels fitted. From page 56 we can determine the required handle rotations (38.5 turns) and page 42 the approximate variator setting (3.5) for 3 meterwheels.

After setting the variator adjustment lever to 3.5 and rotating the calibration handle 38.5 turns we can weigh the collected seed. For this example we find we have a seed collection of:

Seed collected = 2.85 kg (2850 grams)

Therefore the actual sowing rate will be 2.85 kg x 20 = 57 kg/ha.

It will be necessary to increase the variator adjustment and retest the system to obtain the desired 60 kg/ha.

Example 2

An application rate of 120 kg/ha of urea is required on a planting width of 12 metres using 2 meterwheels in a 4 outlet meterbox. From page 56 we can determine the required handle rotations (32 turns) and page 46 the approximate variator setting (6) for 2 meterwheels using a high rate sprocket ratio (refer page 63).

Fertilizer collected = 5.5kg (5500 grams)
Actual sowing rate = 5.5kg x 20 = 110kg/ha

Therefore increase the variator setting slightly to obtain 120 kg/ha and retest.

To help in finding the new setting, use the following example.

$$\frac{\text{Desired rate x variator setting}}{\text{Actual collected rate}} = \text{new setting}$$

$$\frac{\text{120kg/ha x 6}}{\text{110kg/ha}} = \text{6.55 variator setting}$$

Therefore increase the variator setting from 6 to 6.5 to obtain 120 kg/ha and retest.

Example 3

A 6 outlet meterbox is to be used to plant oats at 65kg/ha. The meterbox has all 6 meterwheels fitted. The implement has a 12.25 metre planting width which will require 31.4 calibration handle turns. (refer page 56).

To determine the appropriate setting for the adjustment assembly, refer to page 47. The approximate setting is 5.2. Also noted, on the top of page 47 is the need to remove the cover plate above the meterwheels. To do this, refer to page 112 in the meterbox section.

After the plate has been removed and some oats placed in the bin, the collection tray is fitted to the meterbox and calibration handle turned 31.4 turns.

Seed collected = 2.6kg/ha (2602 grams)
Actual sowing rate =2.6 x 20 = 52 kg/ha.

Therefore, increase setting to obtain the correct rate. Retest after adjustment.

Example 4

An application rate of 4.5 kg/ha of canola is desired on a planting width of 14.75 metres using a 4 outlet meter box with all meter wheels in place. From page 56 we can determine the required handle rotations (26 turns) and page 53 the approximate variator setting (1.0) for 4 primary hoses with meterwheel reduction cover plates fitted (refer page 110).

Seed collected = 0.237 kg (237 grams)
Actual sowing rate
= .237 kg x 20 = 4.74 kg/ha

Therefore reduce the variator setting from 1.0 to 0.95 to obtain 4.5 kg/ha and retest.

NOTE: It is not recommended to run below 0.75 setting on the variator adjustment assembly. Fit metershaft reduction plates to the metershaft assembly to reduce the metering capacity if required (refer page 110).

The monitor alarm may also need to be lowered when planting low rate crops. Refer to the Operating Section (page 32) for instructions on how to lower the preset alarm value.

Method C:

To be used for low rate seeding where a high degree of accuracy is required or when seeding in difficult conditions eg. very soft ground or with worn tyres.

Step 1. Check the wheel circumference to determine the appropriate calibration procedure. This will require the operator to check the distance travelled after a certain number of rear drive wheel rotations on the seeder. Once this is obtained we can multiply the figure by a known ratio to determine the exact number of calibration handle turns to do our standard 1/20th of a hectare sample (Method B).

When doing the wheel test it is important that the bins are half full of product and that the tyre pressure is correct (refer specification pages). Testing should be carried out on the ground being sown.

When a seeder is hitched to the implement and in the paddock sitting on cultivated ground you should:

a. Mark the left-hand rear tyre (drive wheel) with chalk or paint on the sidewall at the base of the tyre (vertical line through wheel's centreline).

b. Place a marker on the ground next to the mark on the tyre.

c. Drive the seeder forward over the cultivated ground in a straight line so that the marked tyre rotates at least 5 times. You will need help to determine the number of rotations ie. One person drives the tractor the other being the observer. The marked tyre should be brought around so that the mark is at the base of the tyre as before.

d. Using a long tape, measure the distance travelled after the 5 rotations of the seeder wheel. Distance will be approximately 19 to 25 metres depending on the seeder model.

e. Divide this figure by the number of rotations (5) to determine the actual circumference of the wheel.

f. Use the wheel circumference along with the known sprocket ratio and sowing width to determine the appropriate number of calibration handle turns as shown below.

$$\frac{500 \times \text{sprocket ratio}}{\text{sowing width} \times \text{wheel circ.}} = \text{handle turns}$$

Sprocket ratio:	1830 seeder = 3.198
(drive wheel to	1850 seeder = 3.457
calibration handle)	1860 seeder = 3.716
	1880 seeder = 4.148
	2120 seeder = 4.321
	2150 seeder = 4.581

Example 1

Determine the correct number of calibration handle turns to calibrate the seeder. After 5 rotations of the drive wheel in extremely soft conditions on an 1850 Series Seeder the measured distance travelled is 21.50 metres. Implement sowing width in this case is 13.75 metres. Therefore the wheel circumference is:

$$\frac{21.5 \text{ metres}}{5 \text{ rotations}} = 4.3 \text{ metres (wheel circ.)}$$

$$\frac{500 \times \text{sprocket ratio}}{\text{sowing width} \times \text{wheel circ.}} = \text{handle turns}$$

$$\frac{500 \times 3.457 \text{ ratio}}{13.75 \text{ metres} \times 4.3 \text{ metres}} = 29.2 \text{ turns}$$

EXAMPLE 2

Sowing width of 8 metres with an 1830 Air Seeder. After 7 turns of the rear wheel of the seeder, a distance of 27.048 metres was covered. Therefore the wheel circumference equals:

$$\frac{27.048}{7} = 3.864 \text{ metres}$$

The number of calibration handle turns to simulate 1/20th of a hectare equals:

$$\frac{500 \times 3.198 \text{ ratio}}{8 \text{ metres} \times 3.864 \text{ metres}} = 51.7 \text{ turns}$$

NOTE: After this figure has been calculated it is best to compare it with the figure shown in the manual on page 56. The variation should never be more than a couple of handle turns different (approximately 7%).

If a large variation occurs re-check your calculations. If you still find a large difference between your figure and the published figure please contact your authorised dealer for further information.

Once the correct number of handle turns has been determined it is simply a matter of using ‘Method B’ to calibrate your seeder.

Use your figure for the required number of handle turns instead of step 2 (the published figure).

NOTE: If you intend to use your own calibration handle rotation figure and it differs significantly from the published figure (by more than 5%), you should also review the wheel factor figure in the 2200 Surveillance Monitor.

Checking the Wheel Factor in the 2200 Surveillance Monitor

To determine the revised wheel factor value you will need to perform a calculation using your tested wheel circumference figure.

The current factory setting for the wheel factor in the 2200 monitor is 0.675m. This figure means that for every 675mm of forward motion of the seeder the wheel drive magnet, located on the top shaft between the bins, will rotate once past the sensor. Note: assumes **standard sprockets** are fitted (refer parts manual).

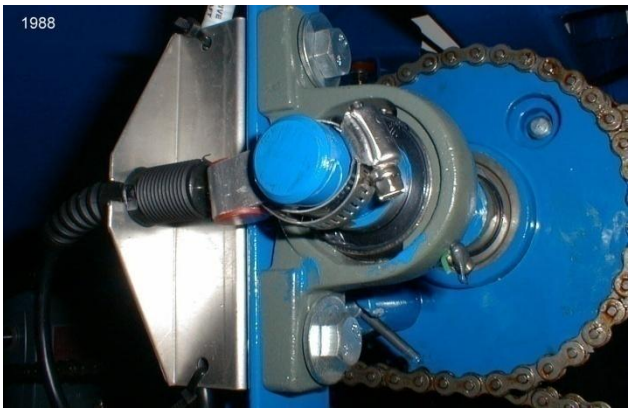

Fig. C9 Drive wheel magnet and sensor.

If the wheel circumference changes by more than a few percent you will probably see a difference between the ground speed displayed on the seeders monitor and the ground speed on the tractor. This variation will also alter the area sown.

To calculate the revised wheel factor you will need to perform the following calculation:

$$\frac{\text{tested wheel circumference}}{\text{drive wheel ratio}} = \text{New Wheel Factor}$$

Drive wheel ratio:
1830 seeder = 6.150
1850 seeder = 6.648
1860 seeder = 7.147
1880 seeder = 7.978
2120 seeder = 8.310
2150 seeder = 8.809

Example 1

Using example 1 on page 39 to determine the wheel circumference for a 1850 seeder half full of product the field figure was 4.3metres. Therefore the revised monitor wheel factor would be:

$$\frac{4.3}{6.648} = 0.647\text{m}$$

Based on this calculation you would replace the factory setting of 0.675 with you field determined figure. Refer to page 33 for information regarding changing the value.

NOTE: Normally, Method C need only be carried out once during the seeding operation. If seeding conditions change dramatically you may wish to check the wheel circumference again.

Calibrating 3 Bin Ground Drive Seeders

Most 3 bin ground drive air seeders are fitted with a second clutch that will allow one bin to be isolated while on the go. To calibrate, this bin will require power to the second isolating clutch. This can be done at the tractor by operating the clutch switch (master and isolating). It will however be necessary to unplug power going to the main drive clutch at the seeder on the drive wheel to allow the calibration system to turn.

After calibration it will be necessary to re-connect the plug going to the main drive clutch. If you forget, the monitors alarm should sound when you start seeding.

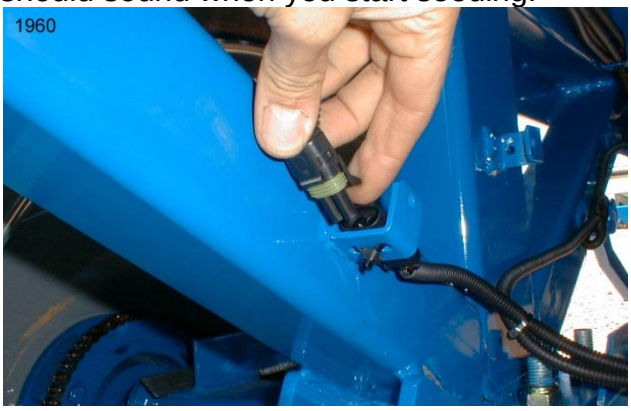

Fig. C10 Main Drive Clutch Plug.

Introduction to Variator Setting Guide

The Variator Setting Guide should be used to approximate the variator setting when calibrating. Variations in product weight and metering performance will generally vary and for this reason it is necessary to always calibrate before seeding.

To use the 'Variator Setting Guide', turn to the page for the appropriate material being calibrated.

Special instructions relevant to the particular material will be listed at the top of each page. For example the Faba Beans instruction tells the operator to use a **Large Seeds/Broad Beans** metershaft assembly.

There are 3 charts on each page. Each chart represents the appropriate setting for the number of meterwheels fitted to the SR Meterbox metershaft assembly.

Example

The approximate variator setting is required for metering wheat at 60kg/ha from a 12 metre width implement through a SR Meterbox fitted with 6 meterwheels. By referring to page 38 we can see that there are no special changes required to the metering system. The bottom chart labeled 'SR Meterbox / 6 meterwheels fitted' should be used.

By reading across and up the chart we can see that the recommended setting is 2.4.

This figure is a guide only and will need to be checked by the normal calibrating procedure.

VARIATOR SETTING GUIDE (INDICATIVE ONLY)

MATERIAL **WHEAT**
MATERIAL BULK DENSITY **850** (kg/cubic metre)
SPROCKET RATIO **STANDARD**

SR Meterbox / 3 Meterwheels fitted

APPLICATION RATE (kg/ha) PER BIN									
100	4.1	5.4	6.8	8.2	9.5	-------	-------	-------	-------
80	3.3	4.3	5.4	6.5	7.6	8.7	9.8	-------	-------
60	2.4	3.3	4.1	4.9	5.7	6.5	7.3	8.2	9.0
40	1.6	2.2	2.7	3.3	3.8	4.3	4.9	5.4	6.0
20	0.8	1.1	1.4	1.6	1.9	2.2	2.4	2.7	3.0
10	-------	-------	-------	0.8	1.0	1.1	1.2	1.4	1.5
	6	8	10	12	14	16	18	20	22

PLANTING WIDTH (metres)

SR Meterbox / 4 Meterwheels fitted

APPLICATION RATE (kg/ha) PER BIN									
100	3.1	4.2	5.2	6.2	7.3	8.3	9.4	-------	-------
80	2.5	3.3	4.2	5.0	5.8	6.7	7.5	8.3	9.2
60	1.9	2.5	3.1	3.7	4.4	5.0	5.6	6.2	6.9
40	1.2	1.7	2.1	2.5	2.9	3.3	3.7	4.2	4.6
20	-------	0.8	1.0	1.2	1.5	1.7	1.9	2.1	2.3
10	-------	-------	-------	-------	0.7	0.8	0.9	1.0	1.1
	6	8	10	12	14	16	18	20	22

PLANTING WIDTH (metres)

SR Meterbox / 6 Meterwheels fitted

APPLICATION RATE (kg/ha) PER BIN									
100	2.0	2.7	3.4	4.1	4.8	5.4	6.1	6.8	7.5
80	1.6	2.2	2.7	3.3	3.8	4.3	4.9	5.4	6.0
60	1.2	1.6	2.0	2.4	2.9	3.3	3.7	4.1	4.5
40	0.8	1.1	1.4	1.6	1.9	2.2	2.4	2.7	3.0
20	-------	-------	-------	0.8	1.0	1.1	1.2	1.4	1.5
10	-------	-------	-------	-------	-------	-------	-------	-------	0.7
	6	8	10	12	14	16	18	20	22

VARSETT1SR PLANTING WIDTH (metres)

Fig. C11 Variator Setting Guide.

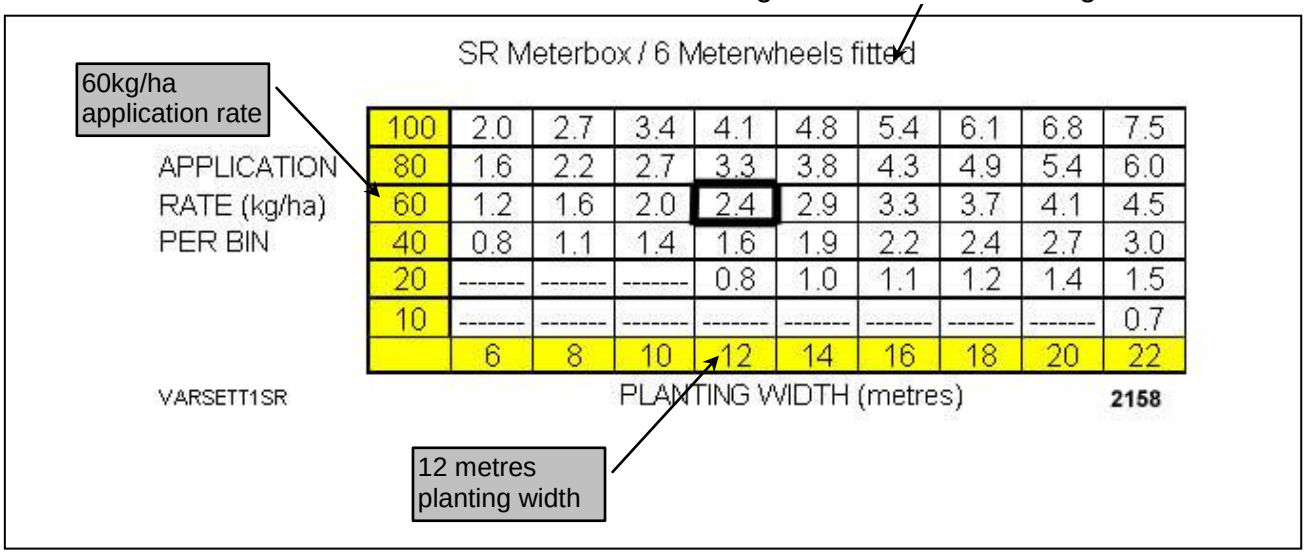

Fig. C12 Enlargement.

VARIATOR SETTING GUIDE (INDICATIVE ONLY)

MATERIAL **WHEAT**
MATERIAL BULK DENSITY **850** (kg/cubic metre)
SPROCKET RATIO **STANDARD**

SR Meterbox / 3 Meterwheels fitted

APPLICATION RATE (kg/ha) PER BIN									
100	4.1	5.4	6.8	8.2	9.5	-------	-------	-------	-------
80	3.3	4.3	5.4	6.5	7.6	8.7	9.8	-------	-------
60	2.4	3.3	4.1	4.9	5.7	6.5	7.3	8.2	9.0
40	1.6	2.2	2.7	3.3	3.8	4.3	4.9	5.4	6.0
20	0.8	1.1	1.4	1.6	1.9	2.2	2.4	2.7	3.0
10	-------	-------	-------	0.8	1.0	1.1	1.2	1.4	1.5
	6	8	10	12	14	16	18	20	22

PLANTING WIDTH (metres)

SR Meterbox / 4 Meterwheels fitted

APPLICATION RATE (kg/ha) PER BIN									
100	3.1	4.2	5.2	6.2	7.3	8.3	9.4	-------	-------
80	2.5	3.3	4.2	5.0	5.8	6.7	7.5	8.3	9.2
60	1.9	2.5	3.1	3.7	4.4	5.0	5.6	6.2	6.9
40	1.2	1.7	2.1	2.5	2.9	3.3	3.7	4.2	4.6
20	-------	0.8	1.0	1.2	1.5	1.7	1.9	2.1	2.3
10	-------	-------	-------	-------	0.7	0.8	0.9	1.0	1.1
	6	8	10	12	14	16	18	20	22

PLANTING WIDTH (metres)

SR Meterbox / 6 Meterwheels fitted

APPLICATION RATE (kg/ha) PER BIN									
100	2.0	2.7	3.4	4.1	4.8	5.4	6.1	6.8	7.5
80	1.6	2.2	2.7	3.3	3.8	4.3	4.9	5.4	6.0
60	1.2	1.6	2.0	2.4	2.9	3.3	3.7	4.1	4.5
40	0.8	1.1	1.4	1.6	1.9	2.2	2.4	2.7	3.0
20	-------	-------	-------	0.8	1.0	1.1	1.2	1.4	1.5
10	-------	-------	-------	-------	-------	-------	-------	-------	0.7
	6	8	10	12	14	16	18	20	22

VARSETT1SR

PLANTING WIDTH (metres)

VARIATOR SETTING GUIDE (INDICATIVE ONLY)

MATERIAL **SUPER PHOSPHATE**
MATERIAL BULK DENSITY **1160** (kg/cubic metre)
SPROCKET RATIO **STANDARD**

SR Meterbox / 3 Meterwheels fitted

APPLICATION RATE (kg/ha) PER BIN									
160	4.8	6.4	8.0	9.6	-------	-------	-------	-------	-------
120	3.6	4.8	6.0	7.2	8.4	9.6	-------	-------	-------
100	3.0	4.0	5.0	6.0	7.0	8.0	9.0	-------	-------
80	2.4	3.2	4.0	4.8	5.6	6.4	7.2	8.0	8.8
60	1.8	2.4	3.0	3.6	4.2	4.8	5.4	6.0	6.6
40	1.2	1.6	2.0	2.4	2.8	3.2	3.6	4.0	4.4
20	-------	0.8	1.0	1.2	1.4	1.6	1.8	2.0	2.2
	6	8	10	12	14	16	18	20	22

PLANTING WIDTH (metres)

SR Meterbox / 4 Meterwheels fitted

APPLICATION RATE (kg/ha) PER BIN									
160	3.7	4.9	6.1	7.3	8.5	9.8	-------	-------	-------
120	2.7	3.7	4.6	5.5	6.4	7.3	8.2	9.2	-------
100	2.3	3.1	3.8	4.6	5.3	6.1	6.9	7.6	8.4
80	1.8	2.4	3.1	3.7	4.3	4.9	5.5	6.1	6.7
60	1.4	1.8	2.3	2.7	3.2	3.7	4.1	4.6	5.0
40	0.9	1.2	1.5	1.8	2.1	2.4	2.7	3.1	3.4
20	-------	-------	0.8	0.9	1.1	1.2	1.4	1.5	1.7
	6	8	10	12	14	16	18	20	22

PLANTING WIDTH (metres)

SR Meterbox / 6 Meterwheels fitted

APPLICATION RATE (kg/ha) PER BIN									
160	2.4	3.2	4.0	4.8	5.6	6.4	7.2	8.0	8.8
120	1.8	2.4	3.0	3.6	4.2	4.8	5.4	6.0	6.6
100	1.5	2.0	2.5	3.0	3.5	4.0	4.5	5.0	5.5
80	1.2	1.6	2.0	2.4	2.8	3.2	3.6	4.0	4.4
60	0.9	1.2	1.5	1.8	2.1	2.4	2.7	3.0	3.3
40	-------	0.8	1.0	1.2	1.4	1.6	1.8	2.0	2.2
20	-------	-------	-------	-------	-------	0.8	0.9	1.0	1.1
	6	8	10	12	14	16	18	20	22

PLANTING WIDTH (metres)

VARIATOR SETTING GUIDE (INDICATIVE ONLY)

MATERIAL **SUPER PHOSPHATE**
MATERIAL BULK DENSITY **1160** (kg/cubic metre)
SPROCKET RATIO **HIGH RATE**

SR Meterbox / 3 Meterwheels fitted

APPLICATION RATE (kg/ha) PER BIN									
160	2.1	2.8	3.5	4.2	5.0	5.7	6.4	7.1	7.8
120	1.6	2.1	2.7	3.2	3.7	4.2	4.8	5.3	5.8
100	1.3	1.8	2.2	2.7	3.1	3.5	4.0	4.4	4.9
80	1.1	1.4	1.8	2.1	2.5	2.8	3.2	3.5	3.9
60	0.8	1.1	1.3	1.6	1.9	2.1	2.4	2.7	2.9
40	-------	0.7	0.9	1.1	1.2	1.4	1.6	1.8	1.9
20	-------	-------	-------	-------	-------	0.7	0.8	0.9	1.0
	6	8	10	12	14	16	18	20	22

PLANTING WIDTH (metres)

SR Meterbox / 4 Meterwheels fitted

NOT RECOMMENDED

SR Meterbox / 6 Meterwheels fitted

NOT RECOMMENDED

VARSETT3SR

VARIATOR SETTING GUIDE (INDICATIVE ONLY)

MATERIAL **UREA**
MATERIAL BULK DENSITY **780** (kg/cubic metre)
SPROCKET RATIO **STANDARD**

SR Meterbox / 3 Meterwheels fitted

APPLICATION RATE (kg/ha) PER BIN									
160	7.1	9.5	-------	-------	-------	-------	-------	-------	-------
120	5.3	7.1	8.9	-------	-------	-------	-------	-------	-------
100	4.4	5.9	7.4	8.9	-------	-------	-------	-------	-------
80	3.6	4.7	5.9	7.1	8.3	9.5	-------	-------	-------
60	2.7	3.6	4.4	5.3	6.2	7.1	8.0	8.9	9.8
40	1.8	2.4	3.0	3.6	4.1	4.7	5.3	5.9	6.5
20	0.9	1.2	1.5	1.8	2.1	2.4	2.7	3.0	3.3
	6	8	10	12	14	16	18	20	22

PLANTING WIDTH (metres)

SR Meterbox / 4 Meterwheels fitted

APPLICATION RATE (kg/ha) PER BIN									
160	5.4	7.3	9.1	-------	-------	-------	-------	-------	-------
120	4.1	5.4	6.8	8.2	9.5	-------	-------	-------	-------
100	3.4	4.5	5.7	6.8	7.9	9.1	-------	-------	-------
80	2.7	3.6	4.5	5.4	6.4	7.3	8.2	9.1	-------
60	2.0	2.7	3.4	4.1	4.8	5.4	6.1	6.8	7.5
40	1.4	1.8	2.3	2.7	3.2	3.6	4.1	4.5	5.0
20	-------	0.9	1.1	1.4	1.6	1.8	2.0	2.3	2.5
	6	8	10	12	14	16	18	20	22

PLANTING WIDTH (metres)

SR Meterbox / 6 Meterwheels fitted

APPLICATION RATE (kg/ha) PER BIN									
160	3.6	4.7	5.9	7.1	8.3	9.5	-------	-------	-------
120	2.7	3.6	4.4	5.3	6.2	7.1	8.0	8.9	9.8
100	2.2	3.0	3.7	4.4	5.2	5.9	6.7	7.4	8.1
80	1.8	2.4	3.0	3.6	4.1	4.7	5.3	5.9	6.5
60	1.3	1.8	2.2	2.7	3.1	3.6	4.0	4.4	4.9
40	0.9	1.2	1.5	1.8	2.1	2.4	2.7	3.0	3.3
20	-------	-------	0.7	0.9	1.0	1.2	1.3	1.5	1.6
	6	8	10	12	14	16	18	20	22

PLANTING WIDTH (metres)

VARSETT4SR

VARIATOR SETTING GUIDE (INDICATIVE ONLY)

MATERIAL **UREA**

MATERIAL BULK DENSITY **780** (kg/cubic metre)

SPROCKET RATIO **HIGH RATE**

SR Meterbox / 3 meterwheels fitted

APPLICATION RATE (kg/ha) PER BIN									
160	3.2	4.2	5.3	6.3	7.4	8.4	9.5	-------	-------
120	2.4	3.2	3.9	4.7	5.5	6.3	7.1	7.9	8.7
100	2.0	2.6	3.3	3.9	4.6	5.3	5.9	6.6	7.2
80	1.6	2.1	2.6	3.2	3.7	4.2	4.7	5.3	5.8
60	1.2	1.6	2.0	2.4	2.8	3.2	3.6	3.9	4.3
40	0.8	1.1	1.3	1.6	1.8	2.1	2.4	2.6	2.9
20	-------	-------	-------	0.8	0.9	1.1	1.2	1.3	1.4
	6	8	10	12	14	16	18	20	22

PLANTING WIDTH (metres)

SR Meterbox / 4 meterwheels fitted

NOT RECOMMENDED

SR Meterbox / 6 Meterwheels fitted

NOT RECOMMENDED

VARSETT11SR

VARIATOR SETTING GUIDE (INDICATIVE ONLY)

MATERIAL **OATS**
MATERIAL BULK DENSITY **540** (kg/cubic metre)
SPROCKET RATIO **STANDARD**
* ***REMOVE METERSHAFT COVER PLATE***
(Refer page 112 for full details)

SR Meterbox / 3 Meterwheels fitted

APPLICATION RATE (kg/ha) PER BIN									
120	7.7	-------	-------	-------	-------	-------	-------	-------	-------
100	6.4	8.6	-------	-------	-------	-------	-------	-------	-------
80	5.1	6.8	8.6	-------	-------	-------	-------	-------	-------
60	3.8	5.1	6.4	7.7	9.0	-------	-------	-------	-------
40	2.6	3.4	4.3	5.1	6.0	6.8	7.7	8.6	9.4
20	1.3	1.7	2.1	2.6	3.0	3.4	3.8	4.3	4.7
10	-------	0.9	1.1	1.3	1.5	1.7	1.9	2.1	2.4
	6	8	10	12	14	16	18	20	22

PLANTING WIDTH (metres)

SR Meterbox / 4 Meterwheels fitted

APPLICATION RATE (kg/ha) PER BIN									
120	5.9	7.9	9.8	-------	-------	-------	-------	-------	-------
100	4.9	6.6	8.2	9.8	-------	-------	-------	-------	-------
80	3.9	5.2	6.6	7.9	9.2	-------	-------	-------	-------
60	2.9	3.9	4.9	5.9	6.9	7.9	8.8	9.8	-------
40	2.0	2.6	3.3	3.9	4.6	5.2	5.9	6.6	7.2
20	1.0	1.3	1.6	2.0	2.3	2.6	2.9	3.3	3.6
10	-------	-------	0.8	1.0	1.1	1.3	1.5	1.6	1.8
	6	8	10	12	14	16	18	20	22

PLANTING WIDTH (metres)

SR Meterbox / 6 Meterwheels fitted

APPLICATION RATE (kg/ha) PER BIN									
120	3.8	5.1	6.4	7.7	9.0	-------	-------	-------	-------
100	3.2	4.3	5.3	6.4	7.5	8.6	9.6	-------	-------
80	2.6	3.4	4.3	5.1	6.0	6.8	7.7	8.6	9.4
60	1.9	2.6	3.2	3.8	4.5	5.1	5.8	6.4	7.1
40	1.3	1.7	2.1	2.6	3.0	3.4	3.8	4.3	4.7
20	-------	0.9	1.1	1.3	1.5	1.7	1.9	2.1	2.4
10	-------	-------	-------	-------	0.7	0.9	1.0	1.1	1.2
	6	8	10	12	14	16	18	20	22

PLANTING WIDTH (metres)

VARIATOR SETTING GUIDE (INDICATIVE ONLY)

MATERIAL **BARLEY**
MATERIAL BULK DENSITY **750** (kg/cubic metre)
SPROCKET RATIO **STANDARD**

SR Meterbox / 3 Meterwheels fitted

APPLICATION RATE (kg/ha) PER BIN									
160	7.4	9.9	-------	-------	-------	-------	-------	-------	-------
120	5.5	7.4	9.2	-------	-------	-------	-------	-------	-------
100	4.6	6.2	7.7	9.2	-------	-------	-------	-------	-------
80	3.7	4.9	6.2	7.4	8.6	9.9	-------	-------	-------
60	2.8	3.7	4.6	5.5	6.5	7.4	8.3	9.2	-------
40	1.8	2.5	3.1	3.7	4.3	4.9	5.5	6.2	6.8
20	0.9	1.2	1.5	1.8	2.2	2.5	2.8	3.1	3.4
	6	8	10	12	14	16	18	20	22

PLANTING WIDTH (metres)

SR Meterbox / 4 Meterwheels fitted

APPLICATION RATE (kg/ha) PER BIN									
160	5.7	7.6	9.4	-------	-------	-------	-------	-------	-------
120	4.2	5.7	7.1	8.5	-------	-------	-------	-------	-------
100	3.5	4.7	5.9	7.1	8.3	9.4	-------	-------	-------
80	2.8	3.8	4.7	5.7	6.6	7.6	8.5	9.4	-------
60	2.1	2.8	3.5	4.2	5.0	5.7	6.4	7.1	7.8
40	1.4	1.9	2.4	2.8	3.3	3.8	4.2	4.7	5.2
20	0.7	0.9	1.2	1.4	1.7	1.9	2.1	2.4	2.6
	6	8	10	12	14	16	18	20	22

PLANTING WIDTH (metres)

SR Meterbox / 6 Meterwheels fitted

APPLICATION RATE (kg/ha) PER BIN									
160	3.7	4.9	6.2	7.4	8.6	9.9	-------	-------	-------
120	2.8	3.7	4.6	5.5	6.5	7.4	8.3	9.2	-------
100	2.3	3.1	3.8	4.6	5.4	6.2	6.9	7.7	8.5
80	1.8	2.5	3.1	3.7	4.3	4.9	5.5	6.2	6.8
60	1.4	1.8	2.3	2.8	3.2	3.7	4.2	4.6	5.1
40	0.9	1.2	1.5	1.8	2.2	2.5	2.8	3.1	3.4
20	-------	-------	0.8	0.9	1.1	1.2	1.4	1.5	1.7
	6	8	10	12	14	16	18	20	22

PLANTING WIDTH (metres)

VARSETT6SR

VARIATOR SETTING GUIDE (INDICATIVE ONLY)

MATERIAL **PEAS**

MATERIAL BULK DENSITY **860** (kg/cubic metre)

SPROCKET RATIO **STANDARD**

SR Meterbox / 3 Meterwheels fitted

APPLICATION RATE (kg/ha) PER BIN									
180	7.3	9.7	-------	-------	-------	-------	-------	-------	-------
140	5.6	7.5	9.4	-------	-------	-------	-------	-------	-------
120	4.8	6.4	8.1	9.7	-------	-------	-------	-------	-------
100	4.0	5.4	6.7	8.1	9.4	-------	-------	-------	-------
80	3.2	4.3	5.4	6.4	7.5	8.6	9.7	-------	-------
60	2.4	3.2	4.0	4.8	5.6	6.4	7.3	8.1	8.9
40	1.6	2.1	2.7	3.2	3.8	4.3	4.8	5.4	5.9
	6	8	10	12	14	16	18	20	22

PLANTING WIDTH (metres)

SR Meterbox / 4 Meterwheels fitted

APPLICATION RATE (kg/ha) PER BIN									
180	5.6	7.4	9.3	-------	-------	-------	-------	-------	-------
140	4.3	5.8	7.2	8.6	-------	-------	-------	-------	-------
120	3.7	4.9	6.2	7.4	8.6	9.9	-------	-------	-------
100	3.1	4.1	5.1	6.2	7.2	8.2	9.3	-------	-------
80	2.5	3.3	4.1	4.9	5.8	6.6	7.4	8.2	9.1
60	1.9	2.5	3.1	3.7	4.3	4.9	5.6	6.2	6.8
50	1.5	2.1	2.6	3.1	3.6	4.1	4.6	5.1	5.7
40	1.2	1.6	2.1	2.5	2.9	3.3	3.7	4.1	4.5
	6	8	10	12	14	16	18	20	22

PLANTING WIDTH (metres)

SR Meterbox / 6 Meterwheels fitted

APPLICATION RATE (kg/ha) PER BIN									
180	3.6	4.8	6.0	7.3	8.5	9.7	-------	-------	-------
140	2.8	3.8	4.7	5.6	6.6	7.5	8.5	9.4	-------
120	2.4	3.2	4.0	4.8	5.6	6.4	7.3	8.1	8.9
100	2.0	2.7	3.4	4.0	4.7	5.4	6.0	6.7	7.4
80	1.6	2.1	2.7	3.2	3.8	4.3	4.8	5.4	5.9
60	1.2	1.6	2.0	2.4	2.8	3.2	3.6	4.0	4.4
50	1.0	1.3	1.7	2.0	2.4	2.7	3.0	3.4	3.7
40	0.8	1.1	1.3	1.6	1.9	2.1	2.4	2.7	3.0
	6	8	10	12	14	16	18	20	22

PLANTING WIDTH (metres)

VARIATOR SETTING GUIDE (INDICATIVE ONLY)

MATERIAL **PEAS**

MATERIAL BULK DENSITY **860** (kg/cubic metre)

SPROCKET RATIO **HIGH RATE**

SR Meterbox / 3 Meterwheels fitted

APPLICATION RATE (kg/ha) PER BIN									
180	3.2	4.3	5.4	6.4	7.5	8.6	9.7	-------	-------
140	2.5	3.3	4.2	5.0	5.8	6.7	7.5	8.4	9.2
120	2.1	2.9	3.6	4.3	5.0	5.7	6.4	7.2	7.9
100	1.8	2.4	3.0	3.6	4.2	4.8	5.4	6.0	6.6
80	1.4	1.9	2.4	2.9	3.3	3.8	4.3	4.8	5.3
60	1.1	1.4	1.8	2.1	2.5	2.9	3.2	3.6	3.9
40	0.7	1.0	1.2	1.4	1.7	1.9	2.1	2.4	2.6
	6	8	10	12	14	16	18	20	22

PLANTING WIDTH (metres)

SR Meterbox / 4 Meterwheels fitted

NOT RECOMMENDED

SR Meterbox / 6 Meterwheels fitted

NOT RECOMMENDED

VARSETT9SR

VARIATOR SETTING GUIDE (INDICATIVE ONLY)

MATERIAL **FABA BEANS**
MATERIAL BULK DENSITY **800** (kg/cubic metre)
SPROCKET RATIO **STANDARD**

**** USE LARGE SEEDS/BROAD BEANS METERSHAFT ASSEMBLY***

(Refer page 105 for further information)

SR Meterbox / 3 Meterwheels (Large Seeds) fitted

APPLICATION RATE (kg/ha) PER BIN									
180	5.1	6.8	8.5	-------	-------	-------	-------	-------	-------
140	4.0	5.3	6.6	7.9	9.2	-------	-------	-------	-------
120	3.4	4.5	5.7	6.8	7.9	9.1	-------	-------	-------
100	2.8	3.8	4.7	5.7	6.6	7.6	8.5	9.4	-------
80	2.3	3.0	3.8	4.5	5.3	6.0	6.8	7.6	8.3
60	1.7	2.3	2.8	3.4	4.0	4.5	5.1	5.7	6.2
40	1.1	1.5	1.9	2.3	2.6	3.0	3.4	3.8	4.2
	6	8	10	12	14	16	18	20	22

PLANTING WIDTH (metres)

SR Meterbox / 4 Meterwheels (Large Seeds) fitted

APPLICATION RATE (kg/ha) PER BIN									
180	3.9	5.2	6.5	7.8	9.1	-------	-------	-------	-------
140	3.0	4.1	5.1	6.1	7.1	8.1	9.1	-------	-------
120	2.6	3.5	4.3	5.2	6.1	6.9	7.8	8.7	9.5
100	2.2	2.9	3.6	4.3	5.1	5.8	6.5	7.2	8.0
80	1.7	2.3	2.9	3.5	4.1	4.6	5.2	5.8	6.4
60	1.3	1.7	2.2	2.6	3.0	3.5	3.9	4.3	4.8
40	0.9	1.2	1.4	1.7	2.0	2.3	2.6	2.9	3.2
	6	8	10	12	14	16	18	20	22

PLANTING WIDTH (metres)

SR Meterbox / 6 Meterwheels (Large Seeds) fitted

APPLICATION RATE (kg/ha) PER BIN									
180	2.5	3.4	4.2	5.1	5.9	6.8	7.6	8.5	9.3
140	2.0	2.6	3.3	4.0	4.6	5.3	5.9	6.6	7.3
120	1.7	2.3	2.8	3.4	4.0	4.5	5.1	5.7	6.2
100	1.4	1.9	2.4	2.8	3.3	3.8	4.2	4.7	5.2
80	1.1	1.5	1.9	2.3	2.6	3.0	3.4	3.8	4.2
60	0.8	1.1	1.4	1.7	2.0	2.3	2.5	2.8	3.1
40	-------	0.8	0.9	1.1	1.3	1.5	1.7	1.9	2.1
	6	8	10	12	14	16	18	20	22

PLANTING WIDTH (metres)

VARSETT14SR

VARIATOR SETTING GUIDE (INDICATIVE ONLY)

MATERIAL **CHICK PEAS**

MATERIAL BULK DENSITY **800** (kg/cubic metre)

SPROCKET RATIO **STANDARD**

**** USE LARGE SEEDS/BROAD BEANS METERSHAFT ASSEMBLY***

(Refer page 105 for further information)

SR Meterbox / 3 Meterwheels fitted

APPLICATION RATE (kg/ha) PER BIN									
180	5.1	6.8	8.5	-------	-------	-------	-------	-------	-------
140	4.0	5.3	6.6	7.9	9.2	-------	-------	-------	-------
120	3.4	4.5	5.7	6.8	7.9	9.1	-------	-------	-------
100	2.8	3.8	4.7	5.7	6.6	7.5	8.5	9.4	-------
80	2.3	3.0	3.8	4.5	5.3	6.0	6.8	7.5	8.3
60	1.7	2.3	2.8	3.4	4.0	4.5	5.1	5.7	6.2
40	1.1	1.5	1.9	2.3	2.6	3.0	3.4	3.8	4.1
	6	8	10	12	14	16	18	20	22

PLANTING WIDTH (metres)

SR Meterbox / 4 Meterwheels fitted

180	3.9	5.2	6.5	7.8	9.1	10.4	-------	-------	-------
140	3.0	4.0	5.1	6.1	7.1	8.1	9.1	-------	-------
120	2.6	3.5	4.3	5.2	6.1	6.9	7.8	8.7	9.5
100	2.2	2.9	3.6	4.3	5.1	5.8	6.5	7.2	7.9
80	1.7	2.3	2.9	3.5	4.0	4.6	5.2	5.8	6.4
60	1.3	1.7	2.2	2.6	3.0	3.5	3.9	4.3	4.8
40	0.9	1.2	1.4	1.7	2.0	2.3	2.6	2.9	3.2
	6	8	10	12	14	16	18	20	22

SR Meterbox / 6 Meterwheels fitted

180	2.5	3.4	4.2	5.1	5.9	6.8	7.6	8.5	9.3
140	2.0	2.6	3.3	4.0	4.6	5.3	5.9	6.6	7.3
120	1.7	2.3	2.8	3.4	4.0	4.5	5.1	5.7	6.2
100	1.4	1.9	2.4	2.8	3.3	3.8	4.2	4.7	5.2
80	1.1	1.5	1.9	2.3	2.6	3.0	3.4	3.8	4.1
60	0.8	1.1	1.4	1.7	2.0	2.3	2.5	2.8	3.1
40	0.7	0.9	1.2	1.4	1.7	1.9	2.1	2.4	2.6
	6	8	10	12	14	16	18	20	22

VARSETT10SR

VARIATOR SETTING GUIDE (INDICATIVE ONLY)

MATERIAL **CANOLA**
MATERIAL BULK DENSITY **720** (kg/cubic metre)
SPROCKET RATIO **STANDARD**
METERWHEEL REDUCTION PLATES **FITTED**
(Refer to the meterbox section for further information page 110)

SR Meterbox / 3 Meterwheels fitted

APPLICATION RATE (kg/ha) PER BIN									
6.5	1.3	1.8	2.2	2.7	3.1	3.6	4.0	4.5	4.9
5.5	1.1	1.5	1.9	2.3	2.6	3.0	3.4	3.8	4.2
5	1.0	1.4	1.7	2.1	2.4	2.8	3.1	3.4	3.8
4.5	0.9	1.2	1.5	1.9	2.2	2.5	2.8	3.1	3.4
4	0.8	1.1	1.4	1.7	1.9	2.2	2.5	2.8	3.0
3.5	0.7	1.0	1.2	1.4	1.7	1.9	2.2	2.4	2.6
3	-------	0.8	1.0	1.2	1.4	1.7	1.9	2.1	2.3
	6	8	10	12	14	16	18	20	22

PLANTING WIDTH (metres)

SR Meterbox / 4 Meterwheels fitted

APPLICATION RATE (kg/ha) PER BIN									
6.5	1.0	1.4	1.7	2.1	2.4	2.7	3.1	3.4	3.8
5.5	0.9	1.2	1.5	1.7	2.0	2.3	2.6	2.9	3.2
5	0.8	1.1	1.3	1.6	1.8	2.1	2.4	2.6	2.9
4.5	0.7	0.9	1.2	1.4	1.7	1.9	2.1	2.4	2.6
4	-------	0.8	1.1	1.3	1.5	1.7	1.9	2.1	2.3
3.5	-------	0.7	0.9	1.1	1.3	1.5	1.7	1.8	2.0
3	-------	-------	0.8	0.9	1.1	1.3	1.4	1.6	1.7
	6	8	10	12	14	16	18	20	22

PLANTING WIDTH (metres)

SR Meterbox / 6 Meterwheels fitted

APPLICATION RATE (kg/ha) PER BIN									
6.5	-------	0.9	1.1	1.3	1.6	1.8	2.0	2.2	2.5
5.5	-------	0.8	0.9	1.1	1.3	1.5	1.7	1.9	2.1
5	-------	-------	0.9	1.0	1.2	1.4	1.5	1.7	1.9
4.5	-------	-------	0.8	0.9	1.1	1.2	1.4	1.5	1.7
4	-------	-------	-------	0.8	1.0	1.1	1.2	1.4	1.5
3.5	-------	-------	-------	0.7	0.8	1.0	1.1	1.2	1.3
3	-------	-------	-------	-------	0.7	0.8	0.9	1.0	1.1
	6	8	10	12	14	16	18	20	22

PLANTING WIDTH (metres)

VARSETT7SR

VARIATOR SETTING GUIDE (INDICATIVE ONLY)

MATERIAL **SORGHUM**
MATERIAL BULK DENSITY **750** (kg/cubic metre)
SPROCKET RATIO **STANDARD**
METERWHEEL REDUCTION PLATES **FITTED**
(Refer to the meterbox section for further information page 110)

SR Meterbox / 3 Meterwheels fitted

APPLICATION RATE (kg/ha) PER BIN									
12	2.5	3.3	4.1	4.9	5.7	6.6	7.4	8.2	9.0
8	1.6	2.2	2.7	3.3	3.8	4.4	4.9	5.5	6.0
7	1.4	1.9	2.4	2.9	3.4	3.8	4.3	4.8	5.3
6	1.2	1.6	2.1	2.5	2.9	3.3	3.7	4.1	4.5
5	1.0	1.4	1.7	2.1	2.4	2.7	3.1	3.4	3.8
4	0.8	1.1	1.4	1.6	1.9	2.2	2.5	2.7	3.0
3	-------	0.8	1.0	1.2	1.4	1.6	1.8	2.1	2.3
	6	8	10	12	14	16	18	20	22

PLANTING WIDTH (metres)

SR Meterbox / 4 Meterwheels fitted

APPLICATION RATE (kg/ha) PER BIN									
12	1.9	2.5	3.1	3.8	4.4	5.0	5.7	6.3	6.9
8	1.3	1.7	2.1	2.5	2.9	3.4	3.8	4.2	4.6
7	1.1	1.5	1.8	2.2	2.6	2.9	3.3	3.7	4.0
6	0.9	1.3	1.6	1.9	2.2	2.5	2.8	3.1	3.5
5	0.8	1.0	1.3	1.6	1.8	2.1	2.4	2.6	2.9
4	-------	0.8	1.0	1.3	1.5	1.7	1.9	2.1	2.3
3	-------	-------	0.8	0.9	1.1	1.3	1.4	1.6	1.7
	6	8	10	12	14	16	18	20	22

PLANTING WIDTH (metres)

SR Meterbox / 6 Meterwheels fitted

APPLICATION RATE (kg/ha) PER BIN									
12	1.2	1.6	2.1	2.5	2.9	3.3	3.7	4.1	4.5
8	0.8	1.1	1.4	1.6	1.9	2.2	2.5	2.7	3.0
7	0.7	1.0	1.2	1.4	1.7	1.9	2.2	2.4	2.6
6	-------	0.8	1.0	1.2	1.4	1.6	1.8	2.1	2.3
5	-------	-------	0.9	1.0	1.2	1.4	1.5	1.7	1.9
4	-------	-------	-------	0.8	1.0	1.1	1.2	1.4	1.5
3	-------	-------	-------	-------	0.7	0.8	0.9	1.0	1.1
	6	8	10	12	14	16	18	20	22

PLANTING WIDTH (metres)

VARSETT12SR

VARIATOR SETTING GUIDE (INDICATIVE ONLY)

MATERIAL **SUNFLOWER**
MATERIAL BULK DENSITY **460** (kg/cubic metre)
SPROCKET RATIO **STANDARD**
METERWHEEL REDUCTION PLATES **FITTED**
(Refer to the meterbox section for further information page 110)

SR Meterbox / 3 Meterwheels fitted

APPLICATION RATE (kg/ha) PER BIN

12	4.6	6.1	7.7	9.2	-------	-------	-------	-------	-------
10	3.8	5.1	6.4	7.7	9.0	-------	-------	-------	-------
8	3.1	4.1	5.1	6.1	7.2	8.2	9.2	-------	-------
6	2.3	3.1	3.8	4.6	5.4	6.1	6.9	7.7	8.5
5	1.9	2.6	3.2	3.8	4.5	5.1	5.8	6.4	7.0
4	1.5	2.0	2.6	3.1	3.6	4.1	4.6	5.1	5.6
3	1.2	1.5	1.9	2.3	2.7	3.1	3.5	3.8	4.2
	6	8	10	12	14	16	18	20	22

PLANTING WIDTH (metres)

SR Meterbox / 4 Meterwheels fitted

APPLICATION RATE (kg/ha) PER BIN

12	3.1	4.1	5.1	6.1	7.2	8.2	9.2	-------	-------
10	2.6	3.4	4.3	5.1	6.0	6.8	7.7	8.5	9.4
8	2.0	2.7	3.4	4.1	4.8	5.5	6.1	6.8	7.5
7	1.8	2.4	3.0	3.6	4.2	4.8	5.4	6.0	6.6
6	1.5	2.0	2.6	3.1	3.6	4.1	4.6	5.1	5.6
5	1.3	1.7	2.1	2.6	3.0	3.4	3.8	4.3	4.7
4	1.0	1.4	1.7	2.0	2.4	2.7	3.1	3.4	3.8
3	0.8	1.0	1.3	1.5	1.8	2.0	2.3	2.6	2.8
	6	8	10	12	14	16	18	20	22

PLANTING WIDTH (metres)

SR Meterbox / 6 Meterwheels fitted

APPLICATION RATE (kg/ha) PER BIN

12	2.3	3.1	3.8	4.6	5.4	6.1	6.9	7.7	8.5
10	1.9	2.6	3.2	3.8	4.5	5.1	5.8	6.4	7.0
8	1.5	2.0	2.6	3.1	3.6	4.1	4.6	5.1	5.6
7	1.3	1.8	2.2	2.7	3.1	3.6	4.0	4.5	4.9
6	1.2	1.5	1.9	2.3	2.7	3.1	3.5	3.8	4.2
5	1.0	1.3	1.6	1.9	2.2	2.6	2.9	3.2	3.5
4	0.8	1.0	1.3	1.5	1.8	2.0	2.3	2.6	2.8
3	-------	0.8	1.0	1.2	1.3	1.5	1.7	1.9	2.1
	6	8	10	12	14	16	18	20	22

PLANTING WIDTH (metres)

VARSETT15SR

Calibration Handle Rotation Chart

PLANTING WIDTH (m)	***1/20th Hectare***
4.5	85.5
4.8	81.0
5.0	77.0
5.3	73.3
5.5	70.0
5.8	67.0
6.0	64.2
6.3	61.6
6.5	59.2
6.8	57.0
7.0	55.0
7.3	53.1
7.5	51.3
7.8	49.7
8.0	48.1
8.3	46.7
8.5	45.3
8.8	44.0
9.0	42.8
9.3	41.6
9.5	40.5
9.8	39.5
10.0	38.5
10.3	37.6
10.5	36.7
10.8	35.8
11.0	35.0
11.3	34.2
11.5	33.5
11.8	32.8
12.0	32.1
12.3	31.4
12.5	30.8
12.8	30.2
13.0	29.6
13.3	29.0

PLANTING WIDTH (m)	***1/20th Hectare***
13.5	28.5
13.8	28.0
14.0	27.5
14.3	27.0
14.5	26.5
14.8	26.1
15.0	25.7
15.3	25.2
15.5	24.8
15.8	24.4
16.0	24.1
16.3	23.7
16.5	23.3
16.8	23.0
17.0	22.7
17.3	22.3
17.5	22.0
17.8	21.7
18.0	21.4
18.3	21.1
18.5	20.8
18.8	20.5
19.0	20.3
19.3	20.0
19.5	19.7
19.8	19.5
20.0	19.3
20.3	19.0
20.5	18.8
20.8	18.6
21.0	18.3
21.3	18.1
21.5	17.9
21.8	17.7
22.0	17.5

AREA RATE (Hectares/Hour)

Width of Implement (Metres)

Ground Speed (Kilometres per Hour)	3	5	7	9	11	13	15	17	19	21	23	25
2	0.60	1.0	1.4	1.8	2.2	2.6	3.0	3.4	3.8	4.2	4.6	5.0
4	1.2	2.0	2.8	3.6	4.4	5.2	6.0	6.8	7.6	8.4	9.2	10
6	1.8	3.0	4.2	5.4	6.6	7.8	9.0	10	11	13	14	15
8	2.4	4.0	5.6	7.2	8.8	10	12	14	15	17	18	20
10	3.0	5.0	7.0	9.0	11	13	15	17	19	21	23	25
12	3.6	6.0	8.4	11	13	16	18	20	23	25	28	30
14	4.2	7.0	9.8	13	15	18	21	24	27	29	32	35
16	4.8	8.0	11	14	18	21	24	27	30	34	37	40

[Width (m) x Speed (km/h)] x 0.1000

Metric to Imperial Conversion Scales

Speed

km/h	6	7	8	9	10	11	12	14
MPH	3.7	4.3	5	5.6	6.2	6.8	7.5	8.75

Width

m	7	8	9	10	11	12	13	14	15	16	17	18
ft	23	26	30	33	36	39	43	46	49	53	56	59

Conversion for Material Application Rates – lb / acre x 1.121 = kg / ha

lb / acre	*kg / ha*
1.0	1.1
1.5	1.7
2.0	2.2
2.5	2.8
3.0	3.4
3.5	3.9
4.0	4.5
4.5	5.0
5.0	5.6
5.5	6.2
6.0	6.7
6.5	7.3
7.0	7.8
7.5	8.4
8.0	9.0
8.5	9.5
9.0	10.1
9.5	10.6
10.0	11.2
12.0	13.5
14.0	15.7
16.0	17.9
18.0	20.2
20.0	22.4
22.0	24.7
24.0	26.9
26.0	29.1
28.0	31.4
30.0	33.6
32.0	35.9
34.0	38.1
36.0	40.4
38.0	42.6
40.0	44.8
42.0	47.1
44.0	49.3
46.0	51.6
48.0	53.8
50.0	56.1
52.0	58.3
54.0	60.5
56.0	62.8

lb / acre	*kg / ha*
58.0	65.0
60.0	67.3
62.0	69.5
64.0	71.7
66.0	74.0
68.0	76.2
70.0	78.5
72.0	80.7
74.0	73.0
76.0	85.2
78.0	87.4
80.0	89.7
82.0	91.9
84.0	94.2
86.0	96.4
88.0	98.6
90.0	100.9
95.0	106.5
100.0	112.1
105.0	117.7
110.0	123.3
115.0	128.9
120.0	134.5
125.0	140.1
130.0	145.7
135.0	151.3
140.0	156.9
145.0	162.5
150.0	168.2
155.0	173.8
160.0	179.4
170.0	190.6
180.0	201.8
190.0	213.0
200.0	224.2
225.0	252.2
250.0	280.3
275.0	308.3
300.0	336.3
325.0	364.3
350.0	392.4
400.0	448.4

PLANTING DETAIL REFERENCE CHART

DATE	MATERIAL	BULK DENSITY	METERWHEEL REDUCTION PLATE / SPROCKET RATIO	VARIATOR SETTING	APPLICATION RATE	OTHER DETAILS

DATE	MATERIAL	BULK DENSITY	METERWHEEL REDUCTION PLATE / SPROCKET RATIO	VARIATOR SETTING	APPLICATION RATE	OTHER DETAILS

Introduction

The metering system used on your Air Seeder has been designed to handle a large range of seeds and fertilizers at different rates.

Due to the large difference in material flow rates required on an air seeder i.e. 3 kg/ha of canola to 160 kg/ha plus of peas or fertilizer, certain adjustments may need to be made to the meterbox or drive system.

As a guide to when you may need to make changes to the standard system refer to the 'Variator Setting Guide' (pages 41 to 55) for the various materials being sown.

Variators

The metering system is driven through a variable speed gearbox. The variators are mounted next to the meterbox and are adjusted remotely via cables.

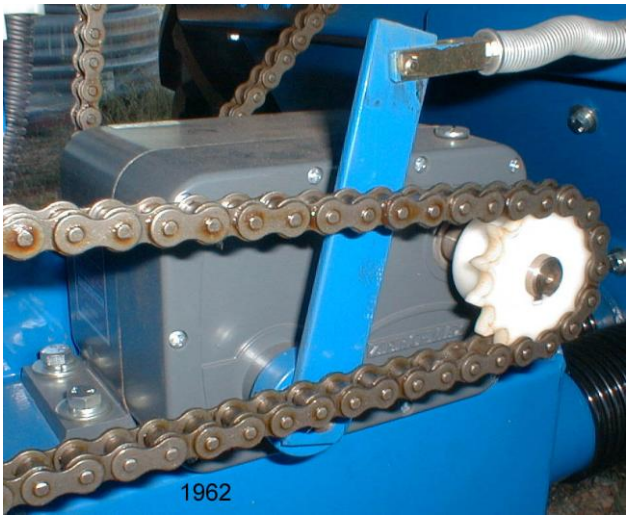

Fig. MD1 Variator Gearbox.

NOTE: It is recommended that when adjusting the variator setting the operator goes past the desired setting (higher rate) a short distance and then rotates the handle back to the required setting.

This method of adjustment will ensure that there is no slack in the cable.

Fig. MD2 Variator Adjustment (2 bin).

All of the main bins metering system can be set from the one station at different rates (fig. MD2).

Variator Maintenance

The variator is virtually maintenance free and will require only a brief inspection to check that the oil seals on both the input and output shafts are in good condition. Refer to the 'General Maintenance Section' for further details.

It is recommended that the oil in the variator be changed if there is any possibility that the fluid may have suffered contamination. Oil contamination will occur if any foreign matter or moisture finds its way into the sealed housing.

To change the variator oil you will need to remove the variator from the seeder and drain the oil at the filling cap. Fill with the correct oil (refer seeder specifications page 13) and refit the variator.

Oil should be level with the centre line of the top shaft after filling.

When re-fitting the adjustment arm to the variator ensure that the variator does not turn when set at zero. Lock both grub screws on the arm after setting.

Checking the Variator for Damage

It must be remembered that the variators, even though they are of robust construction, have a limited torque capacity. Care must be taken when operating the metering system to avoid overloading the metershaft.

DO NOT leave fertilizer in the bin for extended periods of time.

DO NOT use wet or damp fertilizer.

DO NOT use a 'High Rates' sprocket ratio if not recommended.

ALWAYS check that the metershaft turns freely by using the handle supplied (fig. MD3) before calibrating or engaging the clutch.

Fig. MD3 Checking Metershaft.

CHECK THAT THE METERING SHAFTS TURN FREELY.

This operation should become standard procedure after travelling any length of time which would allow the fertilizer to compact, or if material has been left in the bins overnight.

If you feel the variator is damaged in any way you should consult your local authorised service centre.

One method used to check your variator is to place material in the bin and set the variable adjustment at the maximum setting (10). Fit the calibration collection box and turn the calibration handle to operate the variator.

The variator output shaft, when set at maximum, should rotate 1 turn for every 4 turns of the input shaft. You will need to mark the shaft or sprocket and have someone watch the input shaft side while the person turning the calibration handle watches the output side.

Drive System

The variators are driven by the ground wheel, through a series of sprockets, and an electro-magnetic clutch.

The clutch is operated from the cab of the tractor via the clutch switch. It can be engaged or disengaged at anytime when at seeding speeds or while stationary. **ALWAYS** check that the metershafts turn freely before engaging.

Disengaging sprockets are fitted to the drive shafts before the variators. These large sprockets have a drive pin that can be disengaged to isolate a meterbox for calibration or seeding purposes.

The 3 bin model seeders often have a second clutch to isolate one of the bins that can be operated from the tractor cabin.

Checking the Drive System

To check the resistance of the drive system, fit the calibration handle and hang a spring scale from the handle. With the clutch disengaged and both metering systems operating, but both bins empty, rotate the handle pulling through some spring scales. Resistance should not be greater than 11kg at the handle.

Check bearings and all moving parts for damage if resistance is high.

Lubricate all bearings and chains.

Replace sprockets and chain if badly worn.

High Rate Sprocket Ratio

When wishing to meter high rates of seed or fertilizer it may be necessary to increase the speed range of the metershaft. This is done by altering the sprocket ratio from the standard rate to a ***'High Rates'*** sprocket ratio.

Generally this change in ratio would only occur when the machine is being used for deep banding and a reduced number of meterwheels are in place. The 'Variator Setting Guide' will alert the operator when this change may be necessary.

DO NOT use a 'High Rates' sprocket ratio if not recommended. Refer to 'Variator Setting Guide' (pages 41–55) for its appropriate use.

To Change Sprocket Ratio on a Ground Drive Seeder

1. Remove the chain on the right hand side of the meterbox that connects the agitator shaft and the meterwheel shaft.

2. Using an allen key loosen the grub screws that retain the nylon sprockets. Two screws per sprocket.

3. Remove both sprockets and swap their location. This will effectively more than double the speed of the metershaft i.e. the big sprocket now driving the little sprocket. (Fig. MD4).

4. Tighten the grub screws when the sprockets have been correctly located. Check that the metershaft handle still fits and that the 2 sprockets are in line.

5. Refit the chain and check that the system turns freely.

NOTE: Increasing the speed of the metershaft also increases the load on the variator. It is therefore not recommended to run the seeders metering system in this 'High Ratio' *all the time. Variator damage may occur depending on the material's resistance.*

Fig.MD4 High Rates Sprocket Ratio.

Reversing the sprockets will give you the standard sprocket ratio. **ALWAYS** run the system in this mode for normal seeding operations. (Refer Fig. MD5).

Fig.MD5 Standard Sprocket Ratio .

Introduction (VRT Hydraulic Drive)

The VRT Hydraulic Drive metering system fitted to the air seeder will allow the operator to control product application rates from the tractor cab.

The Gason VRT (variable rate technology) system uses hydraulic motors to rotate the seeder's metershafts. A special hydraulic manifold assembly controls oil flow from the tractor's hydraulic system to vary the different metershaft speeds. The Farmscan 3000 & 3500 monitor and seeding pod is the control face of the Gason Hydraulic Drive system.

Fig.V1 The Canlink 3000 monitor .

This section will look at the specific information required to operate the monitor for the Gason VRT system.

It is recommended that the operator reads this section of the manual and views the 'VRT Training Video'. The laminated 'Quick Reference Guide' should be stored in the tractor cab and used to remind the operator how to calibrate the seeder when in the field.

Farmscan have also supplied an operator's manual with the monitor. This manual covers relevant information for the control system and its operation. It will not however give detailed information regarding the calibration and setup procedure for the various products to be sown using your Gason seeder.

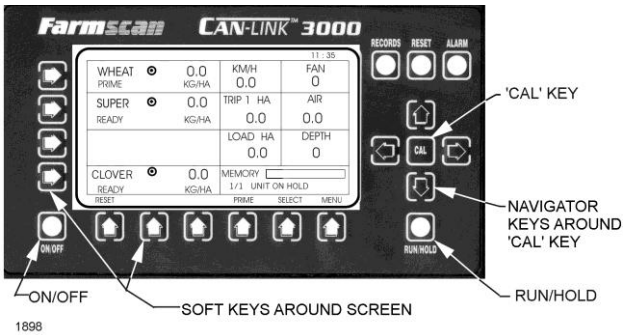

Fig.V2 Key names for the monitor.

Monitor Installation (VRT)

Refer to the Farmscan operator's manual for specific information regarding the physical installation of the monitor to the tractor.

Setting Implement Width

The Air Seeder and monitor have been fully tested and the software setup at the factory to suit your specific model air seeder.

The only setting required by the dealer or operator before calibration and operation is the implement's seeding width. This information can be entered into the monitor by going to the menu screen. Push the 'CAL' key on the front face of the monitor.

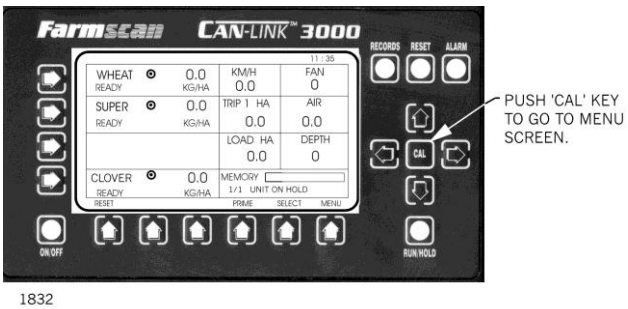

Fig.V3 Monitor Face.

Enter the 'MACHINE' screen by first highlighting the 'MACHINE' prompt, using the navigator keys to move the cursor, and then using the 'CAL' key to select.

Use the soft key to the left of the 'WIDTH FACTOR' to highlight the current factory setting of 10.00 metres. Use the navigator keys around the 'CAL' key to adjust the value. Once set, the operator can push the soft key under the 'EXIT' prompt to return to the main screen.

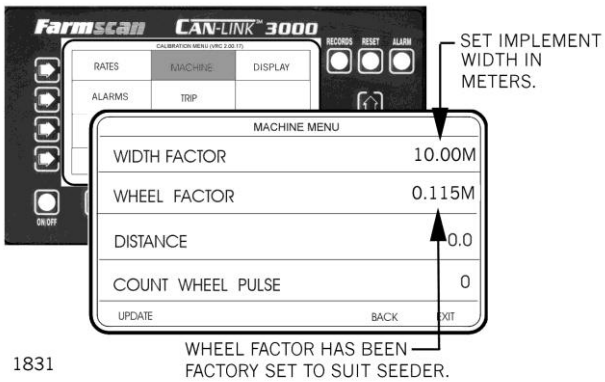

Fig.V4 'MACHINE MENU' screen displayed.

Monitor Operation (VRT)

The Farmscan monitor, when calibrated, controls the application rate of the metering system.

The operator can either:

1. Set a specific application rate on the monitor's screen, and set incremental steps by which this preset rate can be altered while on the go.

2. Create a variable rate application map that has been generated from either a yield map or other field boundary map. A GPS antenna and cable are required. Refer to the Farmscan Operator's manual for more detailed information.

Before operating the seeder it will be necessary to calibrate the metering system. Refer to the Calibration (VRT) section of this manual (page 74) for more information.

Monitor Display Status
READY/OFF /NO CAL

After calibration, a '**READY**' prompt should be displayed on the main screen under each material to be sown.

'**NO CAL**' will be displayed if the bin has not been calibrated.

The status '**OFF**' will be displayed if that particular bin has been switched off.

To correct the 'NO CAL' display you will have to calibrate that particular product. To change the operating status from 'OFF' to 'READY' simply press and hold the soft key directly to the left of that particular bin display.

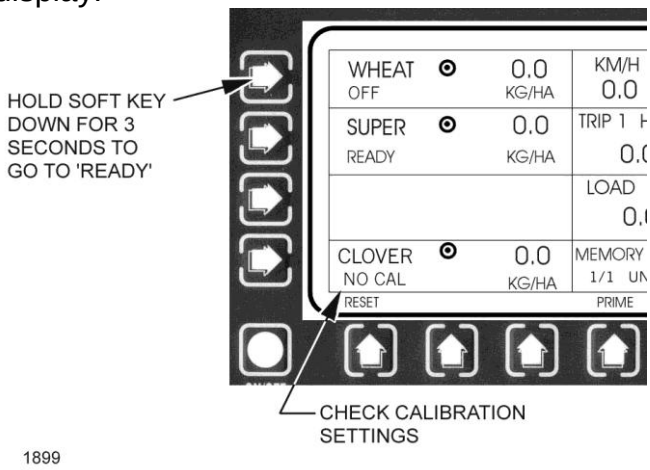

Fig.V5 Status displayed on the Main screen.

Displayed Application Rates

When stationary the main screen will display 0.0 KG/HA application rate for all bins. This is to show the operator that the metering system is not operating. If you wish to check the actual set rate simply press the soft key to the left of the appropriate bin/product. The set rate will then be displayed for a few seconds before resuming the actual rate being metered.

Changing Displayed Rates

The Application rate can be altered while on the go by first highlighting the appropriate bin/product by pressing the soft key to the left, and then using either the up or down navigator keys around the 'CAL' key. To reset the target rate simply press the soft key under the 'RESET' prompt with the appropriate bin/product highlighted.

RUN/HOLD Function

When the monitor is switched on, the screen will display '**UNIT ON HOLD**'. This shows that the metering system is disengaged and will not operate even if it receives a ground speed feedback. The operator can change this status by simply pressing the 'RUN/HOLD' key.

Once 'OFF HOLD' the metering system will operate when it senses a ground speed, and if the fan speed is above the 'fan low alarm' point.

The trip functions will start recording the area and rates of application. All alarms will become active to monitor the seeder's operation.

To stop the metering system simply press the 'RUN/HOLD' key and the monitor will go back to its '**UNIT ON HOLD**' status.

PRIME Function

The '**PRIME**' function allows the operator to start the metering system while the seeder is stationary. This can be a useful tool if in the middle of a run or to ensure correct product flow.

It is possible to alter the prime functions run time by changing the preset value in the OPTIONS menu screen.

The prime function can be used similar to the 'RUN/HOLD' key. The operator can be stationary and on hold. By pressing the '**PRIME**' soft key and waiting 3 seconds to allow seed and fertiliser to reach the sowing boots before driving off, the operator can ensure complete ground coverage.

When the monitor registers a ground speed before the prime function stops the monitor will come 'OFF HOLD' automatically. To stop the metering system simply press the 'RUN/HOLD' function key.

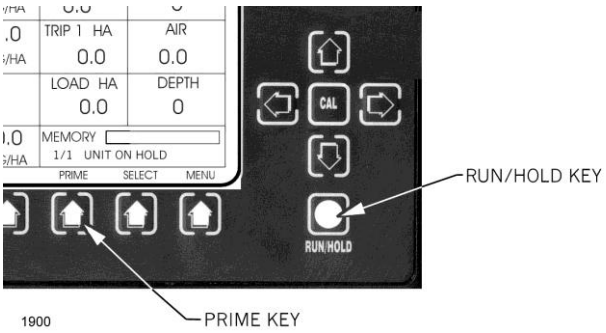

Fig.V6 Prime and Run/Hold key.

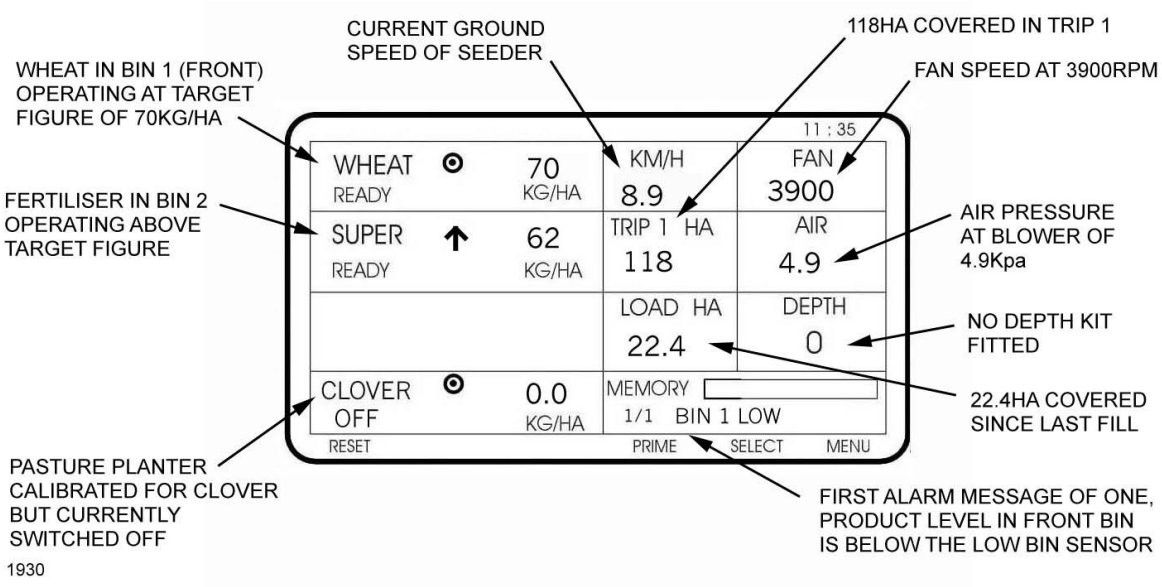

Fig.V7 Main screen showing a typical display while operating.

Message Display

If during the process of seeding a problem occurs with the seeder's operation an alarm will be displayed in the lower right hand corner of the screen.

For a full explanation of all possible alarms refer to the Message Display section in the Farmscan Operator's Manual. The most common alarms are listed in the following table.

UNIT ON HOLD	Monitor not in use.
FAN STOPPED	Fan stopped. Metering system will not run.
FAN SLOW	Fan below low alarm point. Metering system will not run.
FAN FAST	Fan above high alarm point. Fan speed must not exceed 4500rpm.
BIN 1 LOW	Bin level below sensor height on bin no.1. No alarm on bin 4
DRIVE 1-3 FAST	Variation of Sprocket Ratio. Check the preset value on the alarms ratio page.
DRIVE 1-3 SLOW	Variation of Sprocket Ratio. Check the preset value on the alarms ratio page.
BIN 1-4 RATE HI	Over target rate
BIN 1-4 RATE LO	Under target rate
NO COMMS	Pod not responding.

Table.V8 Common Alarms.

Refer to the VRT Trouble Shooting section in this manual for further explanation (p93).

SAFETY (VRT)

The VRT seeder uses hydraulic motors to turn the metering system. The hydraulic motors, which are mounted on the left hand side of each meterbox, takes hydraulic flow from the tractor to rotate.

The motors can be operated from the tractor or the seeder. Hydraulic flow is supplied to the metering system whenever the tractor's hydraulics have been engaged to run the fan or auger, if fitted.

It is important to disengage the tractor's hydraulic system and to **TURN THE TRACTOR OFF** before attempting to work on or around the metering system. The metering system could be activated if someone pushes the prime key or calibration function from the monitor.

The hydraulic motors can also be started from the seeder via the red/green calibration buttons on the left hand side of the seeder or the front face of the pod. Movement can also occur by rotating one or all of the large thumb knobs located on the front face of each bank of the manifold.

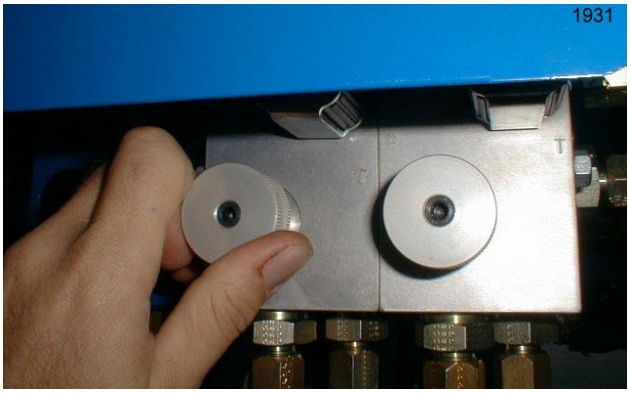

Fig.V9 Manual override valve.

Protective hinged guards have been fitted to the side of each meterbox with warning decals. Ensure that the guards remain in place and that the decals are readable.

Fig.V10 Safety guard and decal.

Monitor Setup Procedure

The Setup Procedure refers to the specific values and settings required by the monitor and pod to operate your particular seeder. All new seeders coming from the Gason factory have already been setup and require only minimal input (refer to ‘Setting Implement Width’ on page 64).

It may be necessary to go through a setup procedure if the monitor or pod have been replaced, or if new software has been loaded to the Monitor or Monitor and Pod.

Refer to the Farmscan Operator’s Manual for information about uploading programs to your pod and monitor. It is often possible to save your calibration settings (product information) onto the same data card or a spare card before uploading the new program. This will allow you to reload the previous default values and product details to retain existing information.

When you change software your existing product application records may be deleted. Later versions of monitor software will allow you to save this information for loading onto a home/office PC.

The following instructions therefore, refer to a monitor and pod system that have no stored values for your specific air seeder.

Setup Procedure

1. Go to the ‘SETUP’ screen via the ‘MENU’ screen by highlighting the appropriate prompt and pushing the ‘CAL’ key.

2. Enable bin 1 by pressing the soft key to the left of the screen for 3 seconds. Scroll through the various control systems by using the up and down navigator keys, selecting the ‘HYD PROP/XPRO’ option.

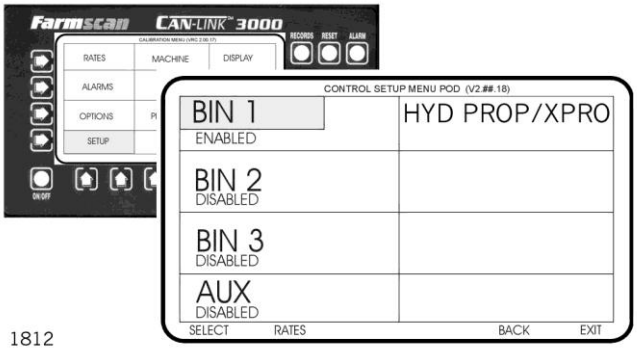

Fig.V11 Setup screen with bin 1 enabled.

Push the soft key under the ‘SELECT’ prompt on screen to go to the next stage of the set-up procedure.

3. Follow the instructions on this screen to obtain a feedback factor and ‘MAX PPM’ figure to ensure a connection has been made to the appropriate bin. This will involve pushing the soft key under the ‘START’ prompt on the screen, and then pushing the green calibration button on the left-hand side of the seeder. The tractor’s hydraulic system will need to be engaged for this procedure. The particular bin’s metering system will run for approximately 5 seconds at its maximum speed.

4. Push the soft-key under the ‘END’ prompt after the metering system has stopped. A factor will appear at the lower right-hand side of the screen. This factor should be either 3 or 4.

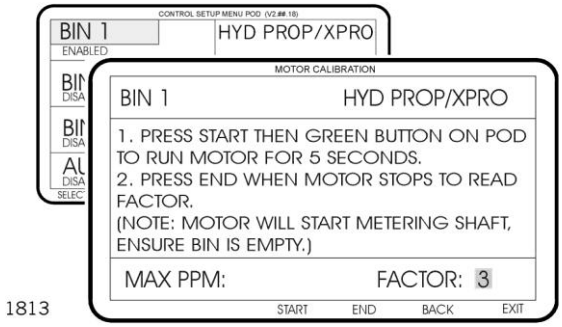

Fig. V12 Motor Calibration screen.

5. Return to the ‘SETUP’ screen by pushing the soft key under the ‘BACK’ prompt.

6. Repeat this process to enable all remaining bins. Set the pasture planter, if fitted, as the Auxiliary bin. The example shown below (Fig. V13) shows a typical 2 bin air seeder fitted with a pasture planter.

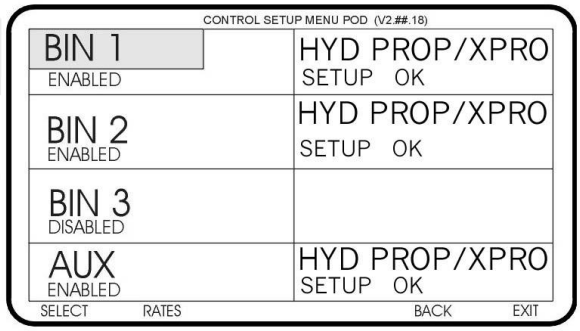

1816

Fig. V13 Setup screen complete.

7. Next, set machine options from the 'OPTION' screen.

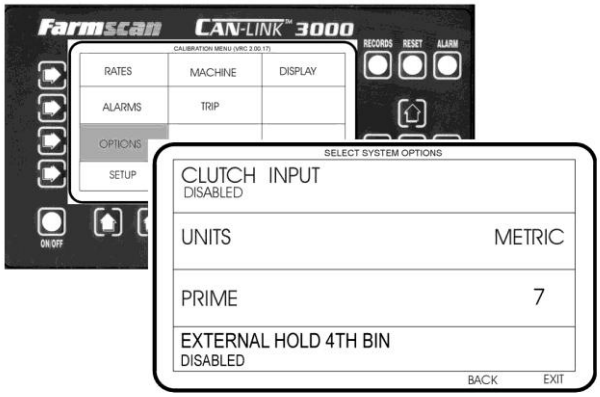

1824

Fig. V14 Option screen.

8. Set the correct time and date on the 'CLOCK/GPS' screen. The GPS status should be disabled if this function is not going to be used. Push the soft key to the left of the GPS prompt. Continue pressing the soft key until the 'DISABLED' or 'ENABLED' zone is highlighted. Now use the navigator keys to change the status of the GPS system.

9. Set all seeder alarms from the 'ALARMS' screen. Refer ALARMS Settings section beginning this page.

10. Set the specific machine settings in the 'MACHINE' screen. Refer MACHINE Settings on page 70.

The monitor is now ready for operation. The next step is to calibrate the seeder with the product to be sown. Refer to the Calibration Procedure section starting on page 74.

Note: For further information on the monitor refer to the Farmscan Operator's manual, as supplied with the machine.

ALARM Settings

Alarm settings are normally factory set. These can be adjusted or disabled at anytime. Enter the 'ALARMS' screen from the 'MENU' screen. Factory settings for alarms are:

FAN	2000	4600
Enabled	*low alarm*	*high alarm*
AIR	0.0	20.0
Enabled	*low alarm*	*high alarm*
DEPTH (1)	0	
Disabled	*hold*	

(1) A Depth indicator can be fitted as an option on VRT equipped seeders. Disable if not in use.

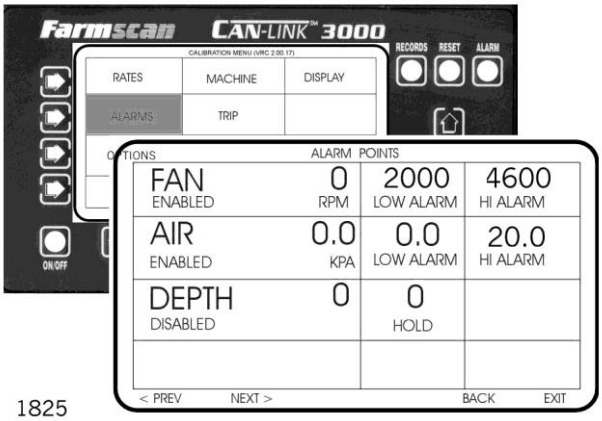

1825

Fig. V15 The first Alarms screen of 3.

Press the soft key under 'NEXT' prompt to progress to the next alarm's screen.

DRIVE RATIO 105:1 for low ratio
ENABLED (2) *or*
24:1 for high ratio

(2) The Drive Ratio alarm monitors motor rotation to metershaft revolutions. Change setting when sprocket ratio is altered. There is no ratio check on DRIVE 4 (used for pasture planter). Leave DRIVE 4 disabled.

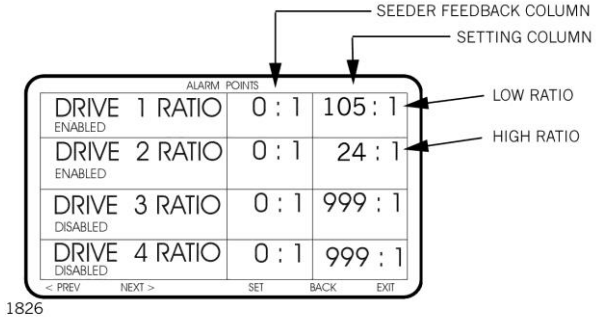

Fig. V16 Ratio setting alarm screen.

Again press the soft key under 'NEXT'.

BIN LEVEL
ENABLED (3)

(3) Bin level will, for example, display as 'BIN 1 LOW' on main screen if product falls below that particular bin's sensor. The pasture planter is always shown as bin 4 or auxiliary.

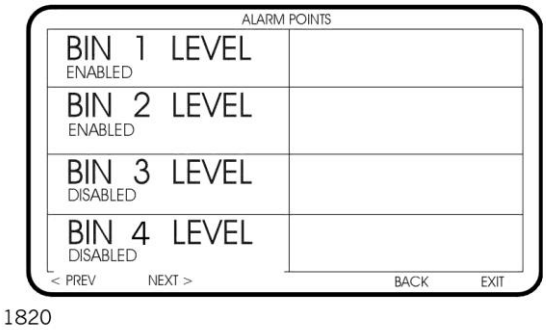

Fig. V17 Bin Level alarm screen.

Push 'NEXT' to start again at the first alarm's screen or 'EXIT' to go to the main operating screen.

MACHINE Settings: ***WHEEL FACTOR***

The 'WHEEL FACTOR' has been preset at the factory to suit the particular seeder's drive wheel and target. The operator should check this value when actually seeding if a difference between the tractor's ground speed and the seeder's displayed speed exists. Wheel factor can be affected by the tyres circumference. Variations in ground hardness, tyre pressure or product load in the bin may change the wheel's rolling circumference.

When checking the Wheel Factor ensure that the drive wheel, left rear wheel fitted with sensor and target, is inflated to the correct pressure and that the tyre is in good condition. The seeder's bins should be half full of product and the test performed on the actual ground to be sown. Refer to the Wheel Factor or Machine section of the Farmscan operator's manual for specific information.

To view the current wheel factor, enter the 'MACHINE' screen from the 'MENU' screen. The factory settings for the 'WHEEL FACTOR' value for the different model air seeders are shown below when fitted with standard tyres.

WIDTH FACTOR	*operator set in metres*	
WHEEL FACTOR	0.105m	1730/1830RT
	0.115m	1750/1850RT
	0.120m	1860RT/FT
	0.125m	1880/90RT/FT
	0.129m	2120RT/FT
	0.140m	2150RT/FT

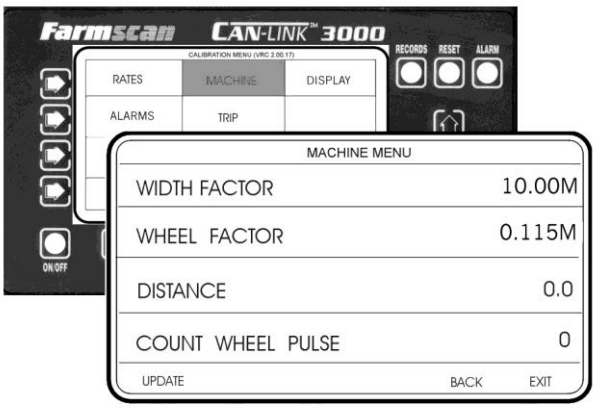

Fig. V18 Machine Menu screen.

Manual Override Introduction

The VRT Hydraulic Drive metering system on your Gason Air Seeder can be operated independently from the Farmscan monitor. This feature will be helpful if carrying out maintenance or in the event of a monitor or pod failure. The manual override system will allow the operator to continue seeding until the monitor system can be repaired or replaced.

The hydraulic manifold bank is a key component of the VRT seeder. It is located between the air seeder bins and can be accessed from the left-hand side of the machine. The manifold system is made up of a number of sections.

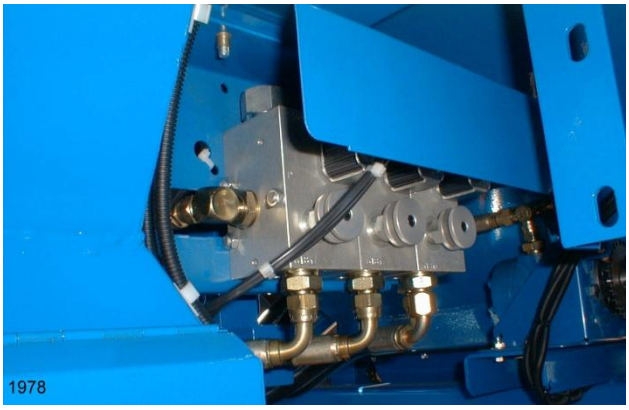

Fig. V19 VRT Manifold Assembly.

Each section controls one hydraulic motor used to run the metering system. The front manifold controls the flow of oil to the front bin (bin number one). The next manifold runs bin number two and so on. The last or most rearward manifold runs the pasture planter if fitted. The pasture planter bin is often referred to as the auxiliary bin.

Located on the lower portion of each of the manifolds is a large thumb knob. This thumb knob can be used to control the flow of hydraulic oil to each motor. Simply undo the rear locking knob and rotate the front thumb knob as you would a tap (anti-clockwise) to open the valve. You will need to have engaged the flow of oil from the tractor to the seeder.

Manual Override Calibration Procedure

Step 1. Place the product to be calibrated in the appropriate bin making any changes to the metering system beforehand.

Step 2. Refer to the manual override calibration chart (page 73) to determine the length of time in seconds you will need to run the metering system to collect a sample equivalent to 1/10th of a hectare. You need to determine an appropriate ground speed that can be constantly maintained during the seeding process.

Step 3. Open the meterbox hatch and place a large container or tarp on the ground to collect the sample material. If calibrating for a low application rate the standard calibration tray may be sufficient.

Fig. V20 Collection of sample.

Step 4. Disengage the fan by shutting off the flow control valve located next to the fan as per the normal calibration procedure.

Step 5. Open the specific manual flow control thumb knob on the manifold approximately 2 to 4 turns depending on the required application rate. Low rates require lesser oil to run the metering motors than high rates.

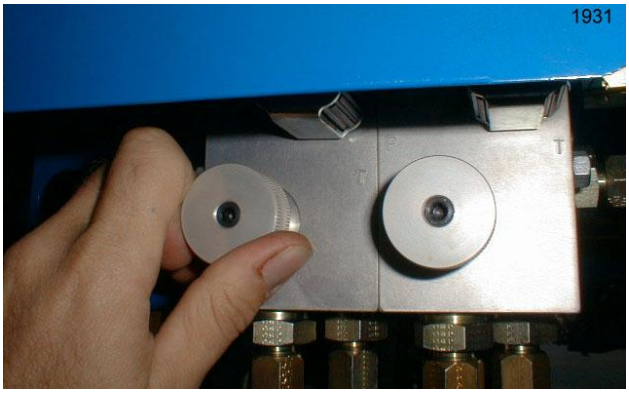

Fig. V21 Thumb knob on VRT manifold.

Step 6. Engage the hydraulics for the air seeder at the tractor. Run the hydraulics for the appropriate time to simulate the 1/10th of a hectare.

Example: If an implement had a 12.5metres sowing width and was driven at a constant 9km/h ground speed, the sample run time to calibrate the machine would be 32 seconds for a 1/10th of a hectare sample.

Step 7. Weigh the sample and multiply the sample weight by 10 to determine the actual application rate. Adjust the thumb knob appropriately to increase or decrease the next calibration sample to obtain the desired rate.

Example: After the 32 seconds the total sample weighs 8.25kg. Therefore :
8.25 x 10 =82.5kg/ha application rate.

Step 8. Repeat steps 6 and 7 until the correct rate has been obtained and checked. Lock the rear thumb knob in position before moving to the next bin.

Step 9. To calibrate the next bin it will be necessary to either remove the material from the first bin, let the material flow onto the ground or remove a chain to prevent the metering system from turning.

Step 10. Repeat the process as per the first bin until all products have been calibrated. Re-fit chains or refill bins to prepare for operation. Re-engage the fan's flow control valve.

The seeder should now be ready for operation. When you engage the hydraulics for the seeder at the tractor you will not only start the fan but rotate the metering system. It may be necessary to increase the fan speed slightly to ensure the distribution system is kept clear at all times.

Operational Limitations

The manual override system has limited accuracy. It requires the operator to maintain a constant ground speed. Variations in the hydraulic oil temperature from the tractor can create variations in metering speeds.

For example: as the tractor speeds up the effective application rate will be reduced. If the temperature of the oil varies from the calibration temperature the change in viscosity of the fluid can increase or decrease the motor's metering speed.

Therefore, it is important the operator checks the rate of application is within an acceptable range when using the Manual override procedure. Check the bin levels are lowering at the desired rate.

Note:
The manual override system is an emergency system only. It will allow the operator to complete a paddock or continue seeding when there is no other option. The first priority however, should be to determine the actual problem with the monitor or pod system. Refer to the trouble shooting section in this manual or in the Farmscan Operator's Manual. Contact your local dealer for more information. Remember to turn the thumb knobs off when returning to normal operation.

Manual Override Calibration Chart for 1/10th of a Hectare

Sowing Width (m)	Constant Ground Speed (km/h)											
	6.5	7	7.5	8	8.5	9	9.5	10	10.5	11	11.5	12
6	92	86	80	75	71	67	63	60	57	55	52	50
6.25	89	82	77	72	68	64	61	58	55	52	50	48
6.5	85	79	74	69	65	62	58	55	53	50	48	46
7	79	73	69	64	61	57	54	51	49	47	45	43
7.5	74	69	64	60	56	53	51	48	46	44	42	40
8	69	64	60	56	53	50	47	45	43	41	39	38
8.5	65	61	56	53	50	47	45	42	40	39	37	35
9	62	57	53	50	47	44	42	40	38	36	35	33
9.5	58	54	51	47	45	42	40	38	36	34	33	32
10	55	51	48	45	42	40	38	36	34	33	31	30
10.5	53	49	46	43	40	38	36	34	33	31	30	29
11	50	47	44	41	39	36	34	33	31	30	28	27
11.5	48	45	42	39	37	35	33	31	30	28	27	26
12	46	43	40	38	35	33	32	30	29	27	26	25
12.5	44	41	38	36	34	**32**	30	29	27	26	25	24
13	43	40	37	35	33	31	29	28	26	25	24	23
13.5	41	38	36	33	31	30	28	27	25	24	23	22
14	40	37	34	32	30	29	27	26	24	23	22	21
14.5	38	35	33	31	29	28	26	25	24	23	22	21
15	37	34	32	30	28	27	25	24	23	22	21	20
15.5	36	33	31	29	27	26	24	23	22	21	20	19
16	35	32	30	28	26	25	24	23	21	20	20	19
16.5	34	31	29	27	26	24	23	22	21	20	19	18
17	33	30	28	26	25	24	22	21	20	19	18	18
17.5	32	29	27	26	24	23	22	21	20	19	18	17
18	31	29	27	25	24	22	21	20	19	18	17	17
18.5	30	28	26	24	23	22	20	19	19	18	17	16
19	29	27	25	24	22	21	20	19	18	17	16	16
19.5	28	26	25	23	22	21	19	18	18	17	16	15
20	28	26	24	23	21	20	19	18	17	16	16	15
21	26	24	23	21	20	19	18	17	16	16	15	14
22	25	23	22	20	19	18	17	16	16	15	14	14

Example:
An implement with a 12.5 metre sowing width driven at a constant 9km/h ground speed. The sample run time to calibrate the machine would be 32 seconds for a 1/10th of a hectare sample.

Introduction

The VRT seeder's calibration procedure involves a controlled rotation of the metering system to enable the collection of a sample of the product being sown.

The collected sample is then weighed and the value recorded in the monitor. Once this weight has been updated a pulse/kg figure will be displayed.

The **pulses/kg** figure, along with the implement's width and ground speed, forms the critical information the monitor and pod system uses to control the metering system to obtain the desired application rate.

A 'QUICK REFERENCE GUIDE' has been supplied with every VRT equipped seeder. The guide goes through a step by step procedure for calibrating your seeder.

The guide has been reproduced below with some further explanation where required. It is also suggested that the operator view the VRT Training Video. This will reinforce the operator's knowledge of the seeder and should be viewed at the beginning of each season.

Calibration Procedure

1. Change meterbox settings to suit product and application rate being sown. Some changes may need to be made to the meterbox before material is placed in the bin. Refer to the sprocket ratio selection guide (pages 78-88) for further information.

As a guide:

Low application rates (below 15 kg/ha)

-you may need to fit metershaft sleeves.

-use low ratio sprocket drive.

Medium to High application rates (above 15kg/ha)

-Select either low or high sprocket ratio. Refer to the Sprocket Ratio Selection Guide for specific information.

2. Place at least 2 bags of the appropriate product in the bin being calibrated.

3. Disengage fan by shutting off the oil flow at the flow control valve located next to the fan. Rotate the handle anti-clockwise to turn off.

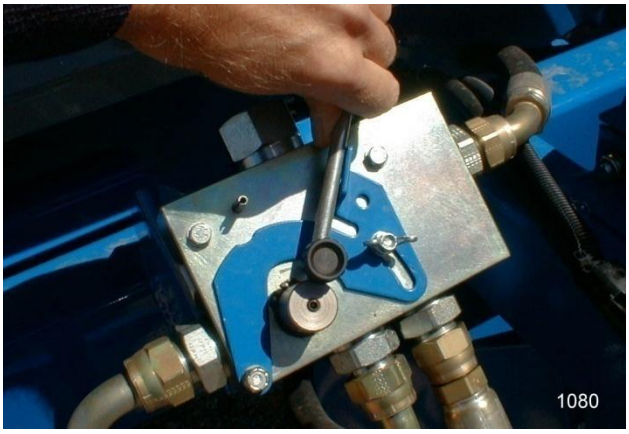

Fig.VC1 Fans Flow Control Valve (open).

4. Turn the monitor on inside the tractor.

5. At the monitor select a new trip (paddock) or reset a previously used trip. This is done from the 'RECORDS' screen. Press the soft key under the 'PREV' or 'NEXT' prompt to change trip, and then the 'SELECT' soft key to lock. To reset the current trip simply push the 'RESET' key twice to clear previous trip information.

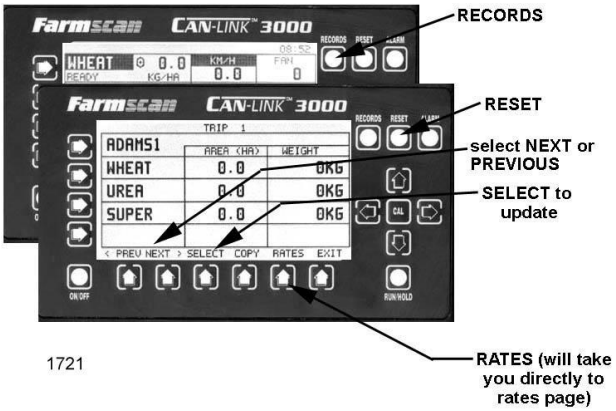

Fig.VC2 Records screen.

6. Go to the 'RATES' screen either directly from the 'RECORDS' screen or from the 'MENU' screen:-

a) Select the bin to calibrate (Bin number 1) by highlighting the appropriate zone and using the up or down navigator keys.
b) Select product for that bin (WHEAT). It is possible to edit or add new product names from the 'PRODUCT' screen
c) Input application rate (70 kg/ha).
d) Input increment steps (5 kg/ha).
e) Go to calibration page by pushing the soft key to the left of CALIB PROD prompt.

Fig. VC3 Rates Screen.

7. *When in the calibration screen (refer Fig.VC4) you will need to set the following:-*

a) 'CAL SPEED'. This is the speed at which the metershaft rotates during the calibration test (1-10). Refer Table VC6. The **default setting is 4**. The higher the setting the faster the speed.
b) 'TEST PULSES'. The number of pulses to run the test (generally 250 for cereals and fertiliser, 600 for Canola). The bigger the sample the better.
c) When complete push the soft key under the 'READY' prompt before leaving the cab. Test pulses will now be displayed as zero and will record feedback from the seeder.

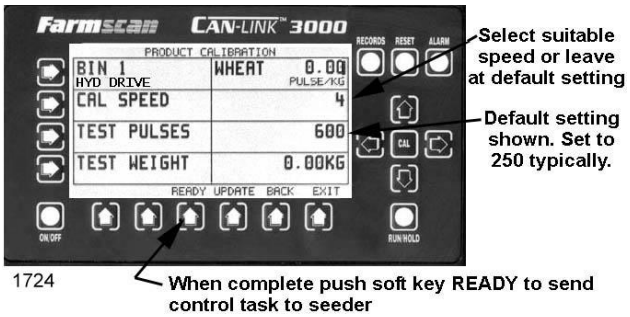

Fig.VC4 Product Calibration Screen.

8. To begin calibration procedure at the seeder:-

a) *Engage tractor's hydraulic circuit to run the air seeder. The fan should not run because the flow control valve at the fan is turned off.*
b) Remove the meterbox hatch on the bin being tested.
c) Fit the calibration sample tray to the bottom and rear of the meterbox.
d) Prime the system to ensure that the new product is fully surrounding the meterwheels. To do this, push the green button on the calibration control box on the seeder. Allow meterwheels to rotate a couple of revolutions. **PUSH THE RED BUTTON TO STOP**. This will stop the meter system and zero the 'TEST PULSES' count when the green button is next pushed.

Fig.VC5 Calibration control box.

e) *Empty sample tray and refit for the full calibration run.*

Calibration Speed Settings (**Default setting 4**)		
Low application rates	2kg/ha – 20 kg/ha	2-3
Medium application rates	20kg/ha–120 kg/ha	**4**
High application rates	120kg - above	5-7

Table VC6

f) Push the green button to start calibration test.

g) Allow system to stop by itself. If the sample tray overflows or a larger sample is required, change the 'TEST PULSES' setting at monitor. It will be necessary to go back one screen and re-enter the Product Calibration screen before making changes to the 'TEST PULSES' value. Push 'READY' prompt again and re-run test at the seeder.

9. After a correct sample run, weigh the sample of product using the scales supplied with the seeder.

NOTE: It is the responsibility of the operator to check the accuracy of the scales on a regular basis.

10. Record the sample weight and input this information into the monitor in kg in the 'TEST WEIGHT' area on the Product Calibration screen. Check that the 'TEST PULSES' value is as per your setting. A small increase in pulses is normal (eg. set at 250, will run and record 252) because the hydraulic motor will overrun slightly.

11. Update the pulses/kg by pushing the soft key under the 'UPDATE' prompt.

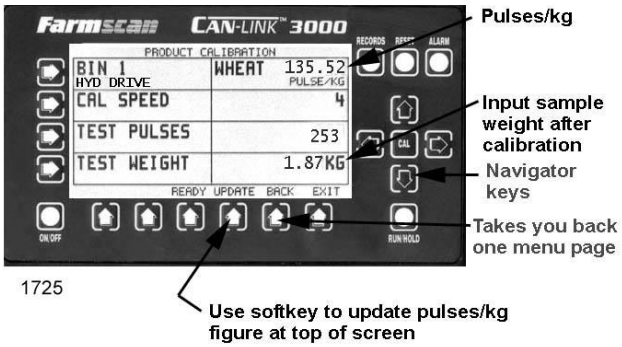

Fig.VC7 Sample weight and update.

12. Push soft key under 'BACK' prompt to go back one menu screen to the 'RATES' screen. Select the next bin to be calibrated by highlighting the BIN prompt at the top left hand side of the screen and using the up or down navigator keys to select the appropriate bin.

13. Repeat the product selection, rate setting and calibration procedure as listed in steps 6 to 12.

    If a product has been previously calibrated in the same bin but for a different trip, a pulses/kg figure will be displayed.

NOTE: It is recommended that the operator **re-calibrates** the bin with the current product and meterbox setup. This operation will ensure that any change in the product's bulk density, flow rate or meterbox setup will be confirmed.

On completion of the calibration process refit the meterbox hatches and calibration tray.

14. When all of the bins have been calibrated return to the main screen by pushing the soft key under the 'EXIT' prompt.

15. Ensure that all of the information displayed on the main page is correct. Bins should show the correct material and rates for 3 seconds and be in the 'READY' mode. Reset the trip and load areas on this screen by using the navigator keys and 'RESET' key if not already on zero.

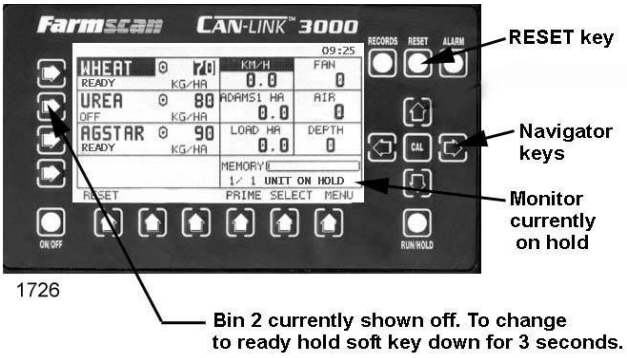

Fig.VC8 Main screen.

16. Re-engage the fan's flow control valve by turning the valve in a clockwise direction. You may wish to shut the flow of oil off at

the tractor before re-engaging the fan's flow control valve.

17. Start the fan by engaging the tractor's hydraulic system. Adjust the fan speed at the tractor if equipped with closed centre hydraulics or at the seeder's flow control valve if open centre hydraulics. For information on appropriate fan speeds refer to the Blower Operation section in this manual (page 118).

18. To begin seeding operation simply push the RUN/HOLD key. The monitor should come off hold and the appropriate rates of application should be displayed. Refer to the Monitor Operation (VRT) section, page 64, for more detail.

NOTE: After completing the calibration procedure it is recommended to record the various values on the record sheet provided (page 89-90) for future reference.

NOTE: Some fertilisers run more freely than others and actual usage may vary from the first calibration sample taken. It is recommended that the operator checks the actual usage after the first bin load. It may be necessary to perform a second calibration test after some material has been metered.

Changing Drive Sprocket Ratio

The VRT hydraulic drive metering system is capable of metering products at very low rates (eg. 3kg/ha of canola) through to extremely high rates (200kg/ha and greater of fertiliser).

The hydraulic motors that rotate the metershafts have a limited speed range. To increase their range of operation a simple quick-change sprocket ratio system has been fitted to the right hand side of the VRT equipped meterbox.

To change the sprocket ratio simply undo the 2 x M8 screws, using the butterfly handle supplied, and remove the retaining collars. Now, simultaneously pull the 2 sprockets off the shafts leaving the chain attached.

Fig. VC9 Removing the retaining collars.

Reverse the placement of the sprockets to obtain the desired ratio (refer decal on underside of meterbox cover). You may need to rotate the metershaft slightly until the second sprocket lines up with the keyway on the agitator shaft. When both keyways line up you can then push the sprockets onto the shaft together. If you experience any problem with the alignment, remove the chain and place one sprocket on at a time.

Fig. VC10 Sprocket removal.

NOTE: It is important to disengage the tractor's hydraulic system and to **TURN THE TRACTOR OFF** before attempting to work on or around the metering system. The metering system could be activated if someone pushes the prime key or calibration function from the monitor.

Introduction to the Sprocket Selection Guide

The Sprocket Selection Guide is used to choose the correct sprocket ratio and meterbox settings required for metering various products at different rates. For example, for oats it indicates that the metershaft cover plate should be removed and for Faba Beans that the operator should use a **Large Seeds/Broad Beans** metershaft assembly (refer page 105 for further information).

The chart takes into account the product's estimated bulk density, the implement's width and ground speed. There are 3 charts on each page. Each chart displays the suggested sprocket ratio setting for the number of meterwheels fitted to the SR Meterbox.

Example:

The operator wishes to sow oats using a SR Meterbox equipped air seeder. Each meterbox has 4 meterwheels in place. The width of the implement is 12 metres and the anticipated ground speed is 8km/h. The required application rate is 45kg/ha.

By referring to the appropriate guide you can determine the correct meterbox settings for a particular product. For oats it suggests you remove the metershaft cover plate. This is to ensure that the light and large seed can feed freely to the meterwheels to minimize the possibility of the product bridging.

By referring to the middle chart labelled 'SR METERBOX / 4 METERWHEELS FITTED' the recommended ratio can be determined ie. follow the closest application row across and the appropriate implement width/ground speed column up. In this case it suggests LOW for 40kg/ha (refer Fig.VC12). Because we are wishing to plant at a slightly higher rate (45kg/ha) and the next cell shows the ratio selection as HIGH the operator should go to the high sprocket ratio.

SPROCKET RATIO SELECTION GUIDE (INDICITIVE ONLY)

MATERIAL **OATS**
MATERIAL BULK DENSITY **590** (kg /cubic meter)
METERBOX SETTINGS **REMOVE METERSHAFT COVER PLATE**

SR Meterbox / 3 Meterwheels fitted

APPLICATION RATE (kg/ha)												
80	HIGH	HIGH	HIGH	HIGH	HIGH	HIGH	HIGH	HIGH	----	HIGH	----	----
60	HIGH	HIGH	HIGH	HIGH	HIGH	HIGH	HIGH	HIGH	HIGH	HIGH	HIGH	HIGH
40	LOW	HIGH	HIGH	HIGH	HIGH	HIGH	HIGH	HIGH	HIGH	HIGH	HIGH	HIGH
20	LOW	LOW	LOW	LOW	LOW	LOW	LOW	LOW	HIGH	LOW	HIGH	HIGH
10	LOW	LOW	LOW	LOW	LOW	LOW	LOW	LOW	LOW	LOW	LOW	LOW
SPEED (km/h)	8	10	12	8	10	12	8	10	12	8	10	12
IMPLEMENT WIDTH (m)	6-10			10-14			14-18			18-22		

SR Meterbox / 4 Meterwheels fitted

APPLICATION RATE (kg/ha)												
80	HIGH	HIGH	HIGH	HIGH	HIGH	HIGH	HIGH	HIGH	HIGH	HIGH	HIGH	HIGH
60	LOW	HIGH	HIGH	HIGH	HIGH	HIGH	HIGH	HIGH	HIGH	HIGH	HIGH	HIGH
40	LOW	LOW	LOW	LOW	HIGH	HIGH	HIGH	HIGH	HIGH	HIGH	HIGH	HIGH
20	LOW	LOW	LOW	LOW	LOW	LOW	LOW	LOW	LOW	LOW	LOW	HIGH
10	LOW	LOW	LOW	LOW	LOW	LOW	LOW	LOW	LOW	LOW	LOW	LOW
SPEED (km/h)	8	10	12	8	10	12	8	10	12	8	10	12
IMPLEMENT WIDTH (m)	6-10			10-14			14-18			18-22		

SR Meterbox / 6 Meterwheels fitted

APPLICATION RATE (kg/ha)												
80	LOW	HIGH	HIGH	HIGH	HIGH	HIGH	HIGH	HIGH	HIGH	HIGH	HIGH	HIGH
60	LOW	LOW	LOW	LOW	HIGH	HIGH	HIGH	HIGH	HIGH	HIGH	HIGH	HIGH
40	LOW	LOW	LOW	LOW	LOW	LOW	LOW	LOW	HIGH	LOW	HIGH	HIGH
20	LOW	LOW	LOW	LOW	LOW	LOW	LOW	LOW	LOW	LOW	LOW	LOW
10	LOW	LOW	LOW	LOW	LOW	LOW	LOW	LOW	LOW	LOW	LOW	LOW
SPEED (km/h)	8	10	12	8	10	12	8	10	12	8	10	12
IMPLEMENT WIDTH (m)	6-10			10-14			14-18			18-22		

Fig.VC11 Sprocket Ratio Selection Guide.

SR Meterbox / 4 Meterwheels fitted

APPLICATION RATE (kg/ha)												
80	HIGH	HIGH	HIGH	HIGH	HIGH	HIGH	HIGH	HIGH	HIGH	HIGH	HIGH	HIGH
60	LOW	HIGH	HIGH	HIGH	HIGH	HIGH	HIGH	HIGH	HIGH	HIGH	HIGH	HIGH
40	LOW	LOW	LOW	LOW	HIGH	HIGH	HIGH	HIGH	HIGH	HIGH	HIGH	HIGH
20	LOW	LOW	LOW	LOW	LOW	LOW	LOW	LOW	LOW	LOW	LOW	HIGH
10	LOW	LOW	LOW	LOW	LOW	LOW	LOW	LOW	LOW	LOW	LOW	LOW
SPEED (km/h)	8	10	12	8	10	12	8	10	12	8	10	12
IMPLEMENT WIDTH (m)	6-10			10-14			14-18			18-22		

Fig.VC12 Enlargement of middle chart for oats.

SPROCKET RATIO SELECTION GUIDE (INDICATIVE ONLY)

MATERIAL **WHEAT**
MATERIAL BULK DENSITY **850** (kg /cubic metre)
METERBOX SETTINGS **STANDARD**

SR Meterbox / 3 Meterwheels fitted

APPLICATION RATE (kg/ha)												
100	HIGH	HIGH	HIGH	HIGH	HIGH	HIGH	HIGH	HIGH	HIGH	HIGH	HIGH	----
80	HIGH	HIGH	HIGH	HIGH	HIGH	HIGH	HIGH	HIGH	HIGH	HIGH	HIGH	HIGH
60	LOW	HIGH	HIGH	HIGH	HIGH	HIGH	HIGH	HIGH	HIGH	HIGH	HIGH	HIGH
40	LOW	LOW	LOW	LOW	HIGH	HIGH	HIGH	HIGH	HIGH	HIGH	HIGH	HIGH
20	LOW	LOW	LOW	LOW	LOW	LOW	LOW	LOW	LOW	LOW	LOW	HIGH
SPEED (km/h)	8	10	12	8	10	12	8	10	12	8	10	12
IMPLEMENT WIDTH (m)	6-10			10-14			14-18			18-22		

SR Meterbox / 4 Meterwheels fitted

APPLICATION RATE (kg/ha)												
100	HIGH	HIGH	HIGH	HIGH	HIGH	HIGH	HIGH	HIGH	HIGH	HIGH	HIGH	HIGH
80	LOW	HIGH	HIGH	HIGH	HIGH	HIGH	HIGH	HIGH	HIGH	HIGH	HIGH	HIGH
60	LOW	LOW	HIGH	HIGH	HIGH	HIGH	HIGH	HIGH	HIGH	HIGH	HIGH	HIGH
40	LOW	LOW	LOW	LOW	LOW	HIGH	LOW	HIGH	HIGH	HIGH	HIGH	HIGH
20	LOW	LOW	LOW	LOW	LOW	LOW	LOW	LOW	LOW	LOW	LOW	LOW
SPEED (km/h)	8	10	12	8	10	12	8	10	12	8	10	12
IMPLEMENT WIDTH (m)	6-10			10-14			14-18			18-22		

SR Meterbox / 6 Meterwheels fitted

APPLICATION RATE (kg/ha)												
100	LOW	LOW	HIGH	HIGH	HIGH	HIGH	HIGH	HIGH	HIGH	HIGH	HIGH	HIGH
80	LOW	LOW	LOW	LOW	HIGH	HIGH	HIGH	HIGH	HIGH	HIGH	HIGH	HIGH
60	LOW	LOW	LOW	LOW	LOW	HIGH	LOW	HIGH	HIGH	HIGH	HIGH	HIGH
40	LOW	LOW	LOW	LOW	LOW	LOW	LOW	LOW	LOW	LOW	LOW	HIGH
20	LOW	LOW	LOW	LOW	LOW	LOW	LOW	LOW	LOW	LOW	LOW	LOW
SPEED (km/h)	8	10	12	8	10	12	8	10	12	8	10	12
IMPLEMENT WIDTH (m)	6-10			10-14			14-18			18-22		

SPROCKET RATIO SELECTION GUIDE (INDICATIVE ONLY)

MATERIAL **DAP/MAP**
MATERIAL BULK DENSITY **1000** (kg /cubic metre)
METERBOX SETTINGS **STANDARD**

SR Meterbox / 3 Meterwheels fitted

APPLICATION RATE (kg/ha)												
120	HIGH	HIGH	HIGH	HIGH	HIGH	HIGH	HIGH	HIGH	----	HIGH	----	----
100	HIGH	HIGH	HIGH	HIGH	HIGH	HIGH	HIGH	HIGH	HIGH	HIGH	HIGH	----
80	HIGH	HIGH	HIGH	HIGH	HIGH	HIGH	HIGH	HIGH	HIGH	HIGH	HIGH	HIGH
60	LOW	HIGH	HIGH	HIGH	HIGH	HIGH	HIGH	HIGH	HIGH	HIGH	HIGH	HIGH
40	LOW	LOW	LOW	LOW	HIGH	HIGH	HIGH	HIGH	HIGH	HIGH	HIGH	HIGH
SPEED (km/h)	8	10	12	8	10	12	8	10	12	8	10	12
IMPLEMENT WIDTH (m)	6-10			10-14			14-18			18-22		

SR Meterbox / 4 Meterwheels fitted

APPLICATION RATE (kg/ha)												
120	HIGH	HIGH	HIGH	HIGH	HIGH	HIGH	HIGH	HIGH	HIGH	HIGH	HIGH	HIGH
100	HIGH	HIGH	HIGH	HIGH	HIGH	HIGH	HIGH	HIGH	HIGH	HIGH	HIGH	HIGH
80	LOW	HIGH	HIGH	HIGH	HIGH	HIGH	HIGH	HIGH	HIGH	HIGH	HIGH	HIGH
60	LOW	LOW	LOW	LOW	HIGH	HIGH	HIGH	HIGH	HIGH	HIGH	HIGH	HIGH
40	LOW	LOW	LOW	LOW	LOW	LOW	LOW	LOW	HIGH	LOW	HIGH	HIGH
SPEED (km/h)	8	10	12	8	10	12	8	10	12	8	10	12
IMPLEMENT WIDTH (m)	6-10			10-14			14-18			18-22		

SR Meterbox / 6 Meterwheels fitted

APPLICATION RATE (kg/ha)												
120	LOW	HIGH	HIGH	HIGH	HIGH	HIGH	HIGH	HIGH	HIGH	HIGH	HIGH	HIGH
100	LOW	LOW	HIGH	HIGH	HIGH	HIGH	HIGH	HIGH	HIGH	HIGH	HIGH	HIGH
80	LOW	LOW	LOW	LOW	HIGH	HIGH	HIGH	HIGH	HIGH	HIGH	HIGH	HIGH
60	LOW	LOW	LOW	LOW	LOW	LOW	LOW	LOW	HIGH	LOW	HIGH	HIGH
40	LOW	LOW	LOW	LOW	LOW	LOW	LOW	LOW	LOW	LOW	LOW	LOW
SPEED (km/h)	8	10	12	8	10	12	8	10	12	8	10	12
IMPLEMENT WIDTH (m)	6-10			10-14			14-18			18-22		

SPROCKET RATIO SELECTION GUIDE (INDICATIVE ONLY)

MATERIAL **UREA**
MATERIAL BULK DENSITY **780** (kg /cubic metre)
METERBOX SETTINGS **STANDARD**

SR Meterbox / 3 Meterwheels fitted

APPLICATION RATE (kg/ha)												
120	HIGH	HIGH	HIGH	HIGH	HIGH	----	HIGH	----	----	----	----	----
100	HIGH	HIGH	HIGH	HIGH	HIGH	HIGH	HIGH	HIGH	----	HIGH	----	----
80	HIGH	HIGH	HIGH	HIGH	HIGH	HIGH	HIGH	HIGH	HIGH	HIGH	HIGH	----
60	HIGH	HIGH	HIGH	HIGH	HIGH	HIGH	HIGH	HIGH	HIGH	HIGH	HIGH	HIGH
40	LOW	LOW	HIGH	HIGH	HIGH	HIGH	HIGH	HIGH	HIGH	HIGH	HIGH	HIGH
SPEED (km/h)	8	10	12	8	10	12	8	10	12	8	10	12
IMPLEMENT WIDTH (m)	6-10			10-14			14-18			18-22		

SR Meterbox / 4 Meterwheels fitted

APPLICATION RATE (kg/ha)												
120	HIGH	HIGH	HIGH	HIGH	HIGH	HIGH	HIGH	HIGH	----	HIGH	----	----
100	HIGH	HIGH	HIGH	HIGH	HIGH	HIGH	HIGH	HIGH	HIGH	HIGH	HIGH	----
80	HIGH	HIGH	HIGH	HIGH	HIGH	HIGH	HIGH	HIGH	HIGH	HIGH	HIGH	HIGH
60	LOW	HIGH	HIGH	HIGH	HIGH	HIGH	HIGH	HIGH	HIGH	HIGH	HIGH	HIGH
40	LOW	LOW	LOW	LOW	LOW	HIGH	HIGH	HIGH	HIGH	HIGH	HIGH	HIGH
SPEED (km/h)	8	10	12	8	10	12	8	10	12	8	10	12
IMPLEMENT WIDTH (m)	6-10			10-14			14-18			18-22		

SR Meterbox / 6 Meterwheels fitted

APPLICATION RATE (kg/ha)												
120	HIGH	HIGH	HIGH	HIGH	HIGH	HIGH	HIGH	HIGH	HIGH	HIGH	HIGH	HIGH
100	LOW	HIGH	HIGH	HIGH	HIGH	HIGH	HIGH	HIGH	HIGH	HIGH	HIGH	HIGH
80	LOW	LOW	HIGH	HIGH	HIGH	HIGH	HIGH	HIGH	HIGH	HIGH	HIGH	HIGH
60	LOW	LOW	LOW	LOW	LOW	HIGH	LOW	HIGH	HIGH	HIGH	HIGH	HIGH
40	LOW	LOW	LOW	LOW	LOW	LOW	LOW	LOW	LOW	LOW	HIGH	HIGH
SPEED (km/h)	8	10	12	8	10	12	8	10	12	8	10	12
IMPLEMENT WIDTH (m)	6-10			10-14			14-18			18-22		

SPROCKET RATIO SELECTION GUIDE (INDICATIVE ONLY)

MATERIAL **OATS**
MATERIAL BULK DENSITY **590** (kg /cubic metre)
METERBOX SETTINGS **REMOVE METERSHAFT COVER PLATE**
(Refer meterbox section for more information)

SR Meterbox / 3 Meterwheels fitted

APPLICATION RATE (kg/ha)												
80	HIGH	HIGH	HIGH	HIGH	HIGH	HIGH	HIGH	HIGH	----	HIGH	----	----
60	HIGH	HIGH	HIGH	HIGH	HIGH	HIGH	HIGH	HIGH	HIGH	HIGH	HIGH	HIGH
40	LOW	HIGH	HIGH	HIGH	HIGH	HIGH	HIGH	HIGH	HIGH	HIGH	HIGH	HIGH
20	LOW	LOW	LOW	LOW	LOW	LOW	LOW	LOW	HIGH	LOW	HIGH	HIGH
10	LOW	LOW	LOW	LOW	LOW	LOW	LOW	LOW	LOW	LOW	LOW	LOW
SPEED (km/h)	8	10	12	8	10	12	8	10	12	8	10	12
IMPLEMENT WIDTH (m)	6-10			10-14			14-18			18-22		

SR Meterbox / 4 Meterwheels fitted

APPLICATION RATE (kg/ha)												
80	HIGH	HIGH	HIGH	HIGH	HIGH	HIGH	HIGH	HIGH	HIGH	HIGH	HIGH	HIGH
60	LOW	HIGH	HIGH	HIGH	HIGH	HIGH	HIGH	HIGH	HIGH	HIGH	HIGH	HIGH
40	LOW	LOW	LOW	LOW	HIGH	HIGH	HIGH	HIGH	HIGH	HIGH	HIGH	HIGH
20	LOW	LOW	LOW	LOW	LOW	LOW	LOW	LOW	LOW	LOW	LOW	HIGH
10	LOW	LOW	LOW	LOW	LOW	LOW	LOW	LOW	LOW	LOW	LOW	LOW
SPEED (km/h)	8	10	12	8	10	12	8	10	12	8	10	12
IMPLEMENT WIDTH (m)	6-10			10-14			14-18			18-22		

SR Meterbox / 6 Meterwheels fitted

APPLICATION RATE (kg/ha)												
80	LOW	HIGH	HIGH	HIGH	HIGH	HIGH	HIGH	HIGH	HIGH	HIGH	HIGH	HIGH
60	LOW	LOW	LOW	LOW	HIGH	HIGH	HIGH	HIGH	HIGH	HIGH	HIGH	HIGH
40	LOW	LOW	LOW	LOW	LOW	LOW	LOW	LOW	HIGH	LOW	HIGH	HIGH
20	LOW	LOW	LOW	LOW	LOW	LOW	LOW	LOW	LOW	LOW	LOW	LOW
10	LOW	LOW	LOW	LOW	LOW	LOW	LOW	LOW	LOW	LOW	LOW	LOW
SPEED (km/h)	8	10	12	8	10	12	8	10	12	8	10	12
IMPLEMENT WIDTH (m)	6-10			10-14			14-18			18-22		

SPROCKET RATIO SELECTION GUIDE (INDICATIVE ONLY)

MATERIAL **BARLEY**
MATERIAL BULK DENSITY **740** (kg /cubic metre)
METERBOX SETTINGS **STANDARD**

SR Meterbox / 3 Meterwheels fitted

APPLICATION RATE (kg/ha)													
80	HIGH	HIGH	HIGH	HIGH	HIGH	HIGH	HIGH	HIGH	HIGH	HIGH	HIGH	----
60	HIGH	HIGH	HIGH	HIGH	HIGH	HIGH	HIGH	HIGH	HIGH	HIGH	HIGH	HIGH
40	LOW	LOW	HIGH	HIGH	HIGH	HIGH	HIGH	HIGH	HIGH	HIGH	HIGH	HIGH
20	LOW	LOW	LOW	LOW	LOW	LOW	LOW	LOW	HIGH	LOW	HIGH	HIGH
10	LOW	LOW	LOW	LOW	LOW	LOW	LOW	LOW	LOW	LOW	LOW	LOW
SPEED (km/h)	8	10	12	8	10	12	8	10	12	8	10	12
IMPLEMENT WIDTH (m)	6-10			10-14			14-18			18-22		

SR Meterbox / 4 Meterwheels fitted

APPLICATION RATE (kg/ha)													
80	HIGH	HIGH	HIGH	HIGH	HIGH	HIGH	HIGH	HIGH	HIGH	HIGH	HIGH	HIGH
60	LOW	HIGH	HIGH	HIGH	HIGH	HIGH	HIGH	HIGH	HIGH	HIGH	HIGH	HIGH
40	LOW	LOW	LOW	LOW	HIGH	HIGH	HIGH	HIGH	HIGH	HIGH	HIGH	HIGH
20	LOW	LOW	LOW	LOW	LOW	LOW	LOW	LOW	LOW	LOW	LOW	LOW
10	LOW	LOW	LOW	LOW	LOW	LOW	LOW	LOW	LOW	LOW	LOW	LOW
SPEED (km/h)	8	10	12	8	10	12	8	10	12	8	10	12
IMPLEMENT WIDTH (m)	6-10			10-14			14-18			18-22		

SR Meterbox / 6 Meterwheels fitted

APPLICATION RATE (kg/ha)													
80	LOW	LOW	HIGH	HIGH	HIGH	HIGH	HIGH	HIGH	HIGH	HIGH	HIGH	HIGH
60	LOW	LOW	LOW	LOW	HIGH	HIGH	HIGH	HIGH	HIGH	HIGH	HIGH	HIGH
40	LOW	LOW	LOW	LOW	LOW	LOW	LOW	LOW	HIGH	LOW	HIGH	HIGH
20	LOW	LOW	LOW	LOW	LOW	LOW	LOW	LOW	LOW	LOW	LOW	LOW
10	----	LOW	LOW	LOW	LOW	LOW	LOW	LOW	LOW	LOW	LOW	LOW
SPEED (km/h)	8	10	12	8	10	12	8	10	12	8	10	12
IMPLEMENT WIDTH (m)	6-10			10-14			14-18			18-22		

SPROCKET RATIO SELECTION GUIDE (INDICATIVE ONLY)

MATERIAL **PEAS**
MATERIAL BULK DENSITY **850** (kg /cubic metre)
METERBOX SETTINGS **STANDARD**

SR Meterbox / 3 Meterwheels fitted

APPLICATION RATE (kg/ha)												
160	HIGH	HIGH	HIGH	HIGH	----	----	----	----	----	----	----	----
120	HIGH	HIGH	HIGH	HIGH	HIGH	HIGH	HIGH	HIGH	----	HIGH	----	----
80	HIGH	HIGH	HIGH	HIGH	HIGH	HIGH	HIGH	HIGH	HIGH	HIGH	HIGH	HIGH
60	LOW	HIGH	HIGH	HIGH	HIGH	HIGH	HIGH	HIGH	HIGH	HIGH	HIGH	HIGH
40	LOW	LOW	LOW	LOW	HIGH	HIGH	HIGH	HIGH	HIGH	HIGH	HIGH	HIGH
SPEED (km/h)	8	10	12	8	10	12	8	10	12	8	10	12
IMPLEMENT WIDTH (m)	6-10			10-14			14-18			18-22		

SR Meterbox / 4 Meterwheels fitted

APPLICATION RATE (kg/ha)												
160	HIGH	HIGH	HIGH	HIGH	HIGH	HIGH	HIGH	----	----	HIGH	----	----
120	HIGH	HIGH	HIGH	HIGH	HIGH	HIGH	HIGH	HIGH	HIGH	HIGH	HIGH	----
80	LOW	HIGH	HIGH	HIGH	HIGH	HIGH	HIGH	HIGH	HIGH	HIGH	HIGH	HIGH
60	LOW	LOW	HIGH	HIGH	HIGH	HIGH	HIGH	HIGH	HIGH	HIGH	HIGH	HIGH
40	LOW	LOW	LOW	LOW	LOW	HIGH	LOW	HIGH	HIGH	HIGH	HIGH	HIGH
SPEED (km/h)	8	10	12	8	10	12	8	10	12	8	10	12
IMPLEMENT WIDTH (m)	6-10			10-14			14-18			18-22		

SR Meterbox / 6 Meterwheels fitted

APPLICATION RATE (kg/ha)												
160	HIGH	HIGH	HIGH	HIGH	HIGH	HIGH	HIGH	HIGH	HIGH	HIGH	HIGH	HIGH
120	LOW	HIGH	HIGH	HIGH	HIGH	HIGH	HIGH	HIGH	HIGH	HIGH	HIGH	HIGH
80	LOW	LOW	LOW	LOW	HIGH	HIGH	HIGH	HIGH	HIGH	HIGH	HIGH	HIGH
60	LOW	LOW	LOW	LOW	LOW	HIGH	LOW	HIGH	HIGH	HIGH	HIGH	HIGH
40	LOW	LOW	LOW	LOW	LOW	LOW	LOW	LOW	LOW	LOW	LOW	HIGH
SPEED (km/h)	8	10	12	8	10	12	8	10	12	8	10	12
IMPLEMENT WIDTH (m)	6-10			10-14			14-18			18-22		

SPROCKET RATIO SELECTION GUIDE (INDICATIVE ONLY)

MATERIAL **FABA BEANS**
MATERIAL BULK DENSITY **800** (kg /cubic metre)
**** USE LARGE SEEDS/BROAD BEANS METERSHAFT ASSEMBLY***
(Refer page 105 for further information)

SR Meterbox / 3 Meterwheels fitted

APPLICATION RATE (kg/ha)													
160	HIGH	HIGH	HIGH	HIGH	HIGH	HIGH	HIGH	HIGH	HIGH	HIGH	----	----
120	HIGH	HIGH	HIGH	HIGH	HIGH	HIGH	HIGH	HIGH	HIGH	HIGH	HIGH	HIGH
80	LOW	HIGH	HIGH	HIGH	HIGH	HIGH	HIGH	HIGH	HIGH	HIGH	HIGH	HIGH
60	LOW	LOW	LOW	LOW	HIGH	HIGH	HIGH	HIGH	HIGH	HIGH	HIGH	HIGH
40	LOW	LOW	LOW	LOW	LOW	LOW	LOW	LOW	HIGH	LOW	HIGH	HIGH
SPEED (km/h)	8	10	12	8	10	12	8	10	12	8	10	12
IMPLEMENT WIDTH (m)	6-10			10-14			14-18			18-22		

SR Meterbox / 4 Meterwheels fitted

APPLICATION RATE (kg/ha)													
160	HIGH	HIGH	HIGH	HIGH	HIGH	HIGH	HIGH	HIGH	HIGH	HIGH	HIGH	HIGH
120	LOW	HIGH	HIGH	HIGH	HIGH	HIGH	HIGH	HIGH	HIGH	HIGH	HIGH	HIGH
80	LOW	LOW	LOW	LOW	HIGH	HIGH	HIGH	HIGH	HIGH	HIGH	HIGH	HIGH
60	LOW	LOW	LOW	LOW	LOW	LOW	LOW	HIGH	HIGH	HIGH	HIGH	HIGH
40	LOW	LOW	LOW	LOW	LOW	LOW	LOW	LOW	LOW	LOW	LOW	HIGH
SPEED (km/h)	8	10	12	8	10	12	8	10	12	8	10	12
IMPLEMENT WIDTH (m)	6-10			10-14			14-18			18-22		

SR Meterbox / 6 Meterwheels fitted

APPLICATION RATE (kg/ha)													
160	LOW	HIGH	HIGH	HIGH	HIGH	HIGH	HIGH	HIGH	HIGH	HIGH	HIGH	HIGH
120	LOW	LOW	LOW	LOW	HIGH	HIGH	HIGH	HIGH	HIGH	HIGH	HIGH	HIGH
80	LOW	LOW	LOW	LOW	LOW	LOW	LOW	LOW	HIGH	LOW	HIGH	HIGH
60	LOW	LOW	LOW	LOW	LOW	LOW	LOW	LOW	LOW	LOW	LOW	HIGH
40	LOW	LOW	LOW	LOW	LOW	LOW	LOW	LOW	LOW	LOW	LOW	LOW
SPEED (km/h)	8	10	12	8	10	12	8	10	12	8	10	12
IMPLEMENT WIDTH (m)	6-10			10-14			14-18			18-22		

SPROCKET RATIO SELECTION GUIDE (INDICATIVE ONLY)

MATERIAL **CANOLA**
MATERIAL BULK DENSITY **710** (kg /cubic metre)
METERWHEEL REDUCTION PLATE **FITTED**
(Refer to the meterbox section for further information page 110)

SR Meterbox / 3 Meterwheels fitted

APPLICATION RATE (kg/ha)												
6	LOW	LOW	LOW	LOW	LOW	LOW	LOW	LOW	LOW	LOW	LOW	LOW
5	LOW	LOW	LOW	LOW	LOW	LOW	LOW	LOW	LOW	LOW	LOW	LOW
4	LOW	LOW	LOW	LOW	LOW	LOW	LOW	LOW	LOW	LOW	LOW	LOW
3	LOW	LOW	LOW	LOW	LOW	LOW	LOW	LOW	LOW	LOW	LOW	LOW
2.5	LOW	LOW	LOW	LOW	LOW	LOW	LOW	LOW	LOW	LOW	LOW	LOW
SPEED (km/h)	8	10	12	8	10	12	8	10	12	8	10	12
IMPLEMENT WIDTH (m)	6-10			10-14			14-18			18-22		

SR Meterbox / 4 Meterwheels fitted

APPLICATION RATE (kg/ha)												
6	LOW	LOW	LOW	LOW	LOW	LOW	LOW	LOW	LOW	LOW	LOW	LOW
5	LOW	LOW	LOW	LOW	LOW	LOW	LOW	LOW	LOW	LOW	LOW	LOW
4	LOW	LOW	LOW	LOW	LOW	LOW	LOW	LOW	LOW	LOW	LOW	LOW
3	LOW	LOW	LOW	LOW	LOW	LOW	LOW	LOW	LOW	LOW	LOW	LOW
2.5	----	LOW	LOW	LOW	LOW	LOW	LOW	LOW	LOW	LOW	LOW	LOW
SPEED (km/h)	8	10	12	8	10	12	8	10	12	8	10	12
IMPLEMENT WIDTH (m)	6-10			10-14			14-18			18-22		

SR Meterbox / 6 Meterwheels fitted

APPLICATION RATE (kg/ha)												
6	LOW	LOW	LOW	LOW	LOW	LOW	LOW	LOW	LOW	LOW	LOW	LOW
5	LOW	LOW	LOW	LOW	LOW	LOW	LOW	LOW	LOW	LOW	LOW	LOW
4	----	LOW	LOW	LOW	LOW	LOW	LOW	LOW	LOW	LOW	LOW	LOW
3	----	----	LOW	LOW	LOW	LOW	LOW	LOW	LOW	LOW	LOW	LOW
2.5	----	----	----	----	LOW	LOW	LOW	LOW	LOW	LOW	LOW	LOW
SPEED (km/h)	8	10	12	8	10	12	8	10	12	8	10	12
IMPLEMENT WIDTH (m)	6-10			10-14			14-18			18-22		

SPROCKET RATIO SELECTION GUIDE (INDICATIVE ONLY)

MATERIAL **SORGHUM**
MATERIAL BULK DENSITY **750** (kg /cubic metre)
METERWHEEL REDUCTION PLATE **FITTED**
(Refer to the meterbox section for further information page 110)

SR Meterbox / 3 Meterwheels fitted

APPLICATION RATE (kg/ha)												
12	LOW	LOW	LOW	LOW	LOW	HIGH	LOW	HIGH	HIGH	HIGH	HIGH	HIGH
8	LOW	LOW	LOW	LOW	LOW	LOW	LOW	LOW	LOW	LOW	LOW	HIGH
6	LOW	LOW	LOW	LOW	LOW	LOW	LOW	LOW	LOW	LOW	LOW	LOW
4	LOW	LOW	LOW	LOW	LOW	LOW	LOW	LOW	LOW	LOW	LOW	LOW
3	LOW	LOW	LOW	LOW	LOW	LOW	LOW	LOW	LOW	LOW	LOW	LOW
SPEED (km/h)	8	10	12	8	10	12	8	10	12	8	10	12
IMPLEMENT WIDTH (m)	6-10			10-14			14-18			18-22		

SR Meterbox / 4 Meterwheels fitted

APPLICATION RATE (kg/ha)												
12	LOW	LOW	LOW	LOW	LOW	LOW	LOW	LOW	HIGH	LOW	HIGH	HIGH
8	LOW	LOW	LOW	LOW	LOW	LOW	LOW	LOW	LOW	LOW	LOW	LOW
6	LOW	LOW	LOW	LOW	LOW	LOW	LOW	LOW	LOW	LOW	LOW	LOW
4	LOW	LOW	LOW	LOW	LOW	LOW	LOW	LOW	LOW	LOW	LOW	LOW
3	LOW	LOW	LOW	LOW	LOW	LOW	LOW	LOW	LOW	LOW	LOW	LOW
SPEED (km/h)	8	10	12	8	10	12	8	10	12	8	10	12
IMPLEMENT WIDTH (m)	6-10			10-14			14-18			18-22		

SR Meterbox / 6 Meterwheels fitted

APPLICATION RATE (kg/ha)												
12	LOW	LOW	LOW	LOW	LOW	LOW	LOW	LOW	LOW	LOW	LOW	LOW
8	LOW	LOW	LOW	LOW	LOW	LOW	LOW	LOW	LOW	LOW	LOW	LOW
6	LOW	LOW	LOW	LOW	LOW	LOW	LOW	LOW	LOW	LOW	LOW	LOW
4	----	LOW	LOW	LOW	LOW	LOW	LOW	LOW	LOW	LOW	LOW	LOW
3	----	----	LOW	LOW	LOW	LOW	LOW	LOW	LOW	LOW	LOW	LOW
SPEED (km/h)	8	10	12	8	10	12	8	10	12	8	10	12
IMPLEMENT WIDTH (m)	6-10			10-14			14-18			18-22		

SPROCKET RATIO SELECTION GUIDE (INDICATIVE ONLY)

MATERIAL **SUNFLOWER**
MATERIAL BULK DENSITY **460** (kg /cubic metre)
METERWHEEL REDUCTION PLATE **FITTED**
(Refer to the meterbox section for further information page 110)

SR Meterbox / 3 Meterwheels fitted

APPLICATION RATE (kg/ha)												
12	LOW	HIGH	HIGH	HIGH	HIGH	HIGH	HIGH	HIGH	HIGH	HIGH	HIGH	HIGH
8	LOW	LOW	LOW	LOW	HIGH	HIGH	HIGH	HIGH	HIGH	HIGH	HIGH	HIGH
6	LOW	LOW	LOW	LOW	LOW	LOW	LOW	HIGH	HIGH	HIGH	HIGH	HIGH
4	LOW	LOW	LOW	LOW	LOW	LOW	LOW	LOW	LOW	LOW	LOW	HIGH
3	LOW	LOW	LOW	LOW	LOW	LOW	LOW	LOW	LOW	LOW	LOW	LOW
SPEED (km/h)	8	10	12	8	10	12	8	10	12	8	10	12
IMPLEMENT WIDTH (m)	6-10			10-14			14-18			18-22		

SR Meterbox / 4 Meterwheels fitted

APPLICATION RATE (kg/ha)												
12	LOW	LOW	LOW	LOW	HIGH	HIGH	HIGH	HIGH	HIGH	HIGH	HIGH	HIGH
8	LOW	LOW	LOW	LOW	LOW	LOW	LOW	HIGH	HIGH	HIGH	HIGH	HIGH
6	LOW	LOW	LOW	LOW	LOW	LOW	LOW	LOW	LOW	LOW	HIGH	HIGH
4	LOW	LOW	LOW	LOW	LOW	LOW	LOW	LOW	LOW	LOW	LOW	LOW
3	LOW	LOW	LOW	LOW	LOW	LOW	LOW	LOW	LOW	LOW	LOW	LOW
SPEED (km/h)	8	10	12	8	10	12	8	10	12	8	10	12
IMPLEMENT WIDTH (m)	6-10			10-14			14-18			18-22		

SR Meterbox / 6 Meterwheels fitted

APPLICATION RATE (kg/ha)												
12	LOW	LOW	LOW	LOW	LOW	LOW	LOW	HIGH	HIGH	HIGH	HIGH	HIGH
8	LOW	LOW	LOW	LOW	LOW	LOW	LOW	LOW	LOW	LOW	LOW	HIGH
6	LOW	LOW	LOW	LOW	LOW	LOW	LOW	LOW	LOW	LOW	LOW	LOW
4	LOW	LOW	LOW	LOW	LOW	LOW	LOW	LOW	LOW	LOW	LOW	LOW
3	LOW	LOW	LOW	LOW	LOW	LOW	LOW	LOW	LOW	LOW	LOW	LOW
SPEED (km/h)	8	10	12	8	10	12	8	10	12	8	10	12
IMPLEMENT WIDTH (m)	6-10			10-14			14-18			18-22		

PLANTING DETAIL REFERENCE CHART FOR VRT METERING SYSTEM

DATE	MATERIAL	BULK DENSITY (kg/litre)	No. OF M/WHEELS	SPROCKET RATIO	REDUCTION PLATES FITTED	APPLICATION RATE (kg/ha)	STEP SETTING (kg/ha)	CAL SPEED (F/Scan)	TEST PULSES (F/Scan)	SAMPLE WEIGHT (kg)	PULSE /kg (Calib. constant) <CFR>	COMMENTS
12/5/02	*Example*	0.975	6	H	NO	75	10	4	200	4.21	47.98	Tray over flowed at 250 pulses

PLANTING DETAIL REFERENCE CHART FOR VRT METERING SYSTEM

DATE	MATERIAL	BULK DENSITY (kg/litre)	No. OF M/WHEELS	SPROCKET RATIO	REDUCTION PLATES FITTED	APPLICATION RATE (kg/ha)	STEP SETTING (kg/ha)	CAL SPEED (F/Scan)	TEST PULSES (F/Scan)	SAMPLE WEIGHT (kg)	PULSE /kg (Calib. constant) <CFR>	COMMENTS

Introduction

The VRT Hydraulic drive metering system utilizes robust and reliable hydraulic and electrical components that should offer excellent service. It is suggested however that regular maintenance checks are carried out on a yearly basis.

Yearly Checklist

At the beginning of each season, operators should carry out the following checks.

1. Hydraulic system:-

   - Replace the oil filter on the seeder and tractor at regular intervals. The seeder's filter should be replaced every 2 to 3 seasons depending on the usage.
   - Check for oil leaks at hose connections, valves and metering drive motors. Repair or replace any worn or leaking hoses or seals.

2. Electrical connectors and terminals:-

   - Check all breakaway electrical connectors for contamination, corrosion or damage. It is critical that the actual pins and receptacles have an excellent contact.

Fig.VM1 VRT breakaway connector.

   - Check the power take off terminal at the tractor's battery. Remove and clean if necessary.
   - Check that the electrical connector at the rear of the monitor is secure. Do not over tighten.
   - Inspect VRT loom routing on the tractor and implement. Replace broken cable ties. Add protection or move cable routing if necessary.

Proximity sensors:-

   - Check proximity sensors on the metering drive hydraulic motors for clearance and operation.
   - Check proximity sensor on the ground drive wheel (left hand rear wheel) that monitors ground speed for clearance and operation.

Proximity Sensor

The proximity sensors are used to record motor speed and ground speed. Their feedback is critical to the accurate operation of the VRT equipped air seeder.

Wheel *Proximity Sensor*

To check that the Wheel sensor is operating correctly you will need to jack the left-hand rear wheel off the ground. With the monitor on, and seeder connected, spin the left-hand rear wheel. A small light at the cable end of the sensor should flash every time a target tooth goes past. Also check that the wheel bearings do not have excessive play. Adjust if necessary.

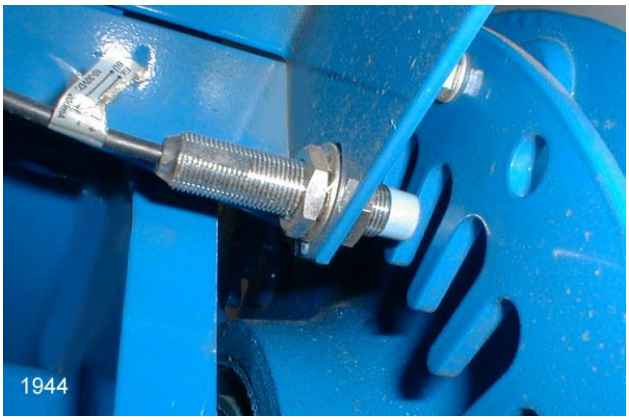

Fig.VM2 Wheel sensor and target.

If the light does not flash at every tooth you may need to reduce the sensor's clearance to the target, or check that the target runs true. Loosen the lock nuts on the sensor with a spanner and move it closer to the target checking that there is sufficient clearance to prevent damage from occurring. Do not over tighten the lock nuts after adjustment. Sensors are generally set with a 2 to 4mm clearance.

Meter Drive Proximity Sensor

There are 2 ways to check the performance of the proximity sensors mounted next to the meter drive motors.

1. *Check the drive ratio alarms screen on the monitor in the cab while seeding.*
2. *Manually operating each hydraulic motor to check that the light on the end of the sensor indicates consistently.*

Monitor Checking Procedure

The operator can enter the Drive Ratio screen from the Alarms screen and compare the number of pulses of the proximity sensor to metershaft rotations.

There should be only 2 different values displayed on the monitor depending on the sprocket ratio being used. High ratio setup will return a 24:1 count, and low ratio setup should display 105:1 value.

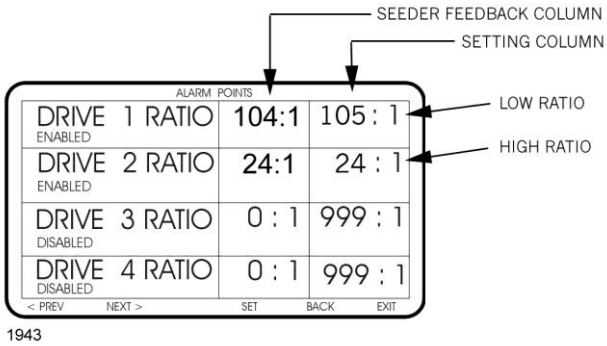

Fig. VM3 Drive ratio screen while seeding.

The centre column displays the actual feedback figure from the seeder. The right-hand column displays the alarm setting. During normal operation you would expect to see a slight variation between pulses when in the low sprocket ratio setting (eg.104:1 to 105:1).

If a large variation occurs an alarm will be activated while seeding to alert the operator of a problem. Stop the seeder and check the sensors manually.

Manual Checking and Adjustment

Engage the seeder's hydraulics at the tractor. Lift one of the left-hand meterbox hinged guards up to give access to the sensor. Open the appropriate manual override valve located on the seeder's manifold assembly, refer Manual Override section, to start the motor turning **slowly**.

Be careful not to place your hand or any loose clothing near the rotating sprockets.

A small light at the cable end of the sensor should flash every time a target tooth goes past.

If the sensor's light is not activated by every tooth, **STOP** the system and adjust sensor distance and alignment to target. Target to sensor gap should be approximately 1-3mm. Check light again at low speed.

NOTE: Do not attempt to adjust the position of the sensors while the meter system is running.

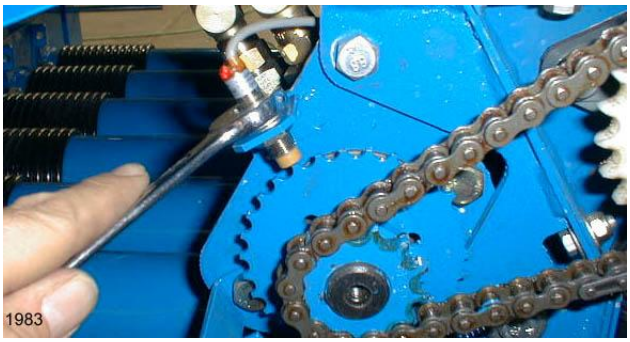

Fig. VM4 Adjusting the proximity sensor.

Problem	**Possible Solution**
1. *Monitor will not turn on.*	➢ Check connection at battery. ➢ Check cable connection is firm at back of monitor. ➢ Refer to the Monitor operator's manual.
2. *Seeder's pod does not respond.*	➢ If the alarm warning 'NO COMMS' is displayed on the monitor check the main breakaway electrical connectors. All pins must be free from dirt and corrosion. ➢ Check for wire loom damage near moving parts or pivoting areas. ➢ Check the voltage at the tractor's battery (12 volts minimum). ➢ Check separate power supply to pod. Use multimeter in bypass plug near pod (12 volts minimum). ➢ Remove remote calibration switch box from seeder loom & retry monitor. ➢ Remove the 2 large plugs from the base of the pod that go to the sensors and hyd. control valves & retry monitor. ➢ If there is power and still no response phone your service agent.
3. *Metering system will not run during the Calibration process.*	➢ Check tractor's hydraulics are engaged. ➢ Try to calibrate another bin to check that the seeder's pod is responding. ➢ Check blade fuse in monitor's power loom near the battery terminal. ➢ Check Setup of seeder's configuration at the monitor. You will need to enter the 'SETUP' screen from the menu page. Refer to the VRT Monitor Setup Procedure section in this manual.
4. *VRT hydraulic motor runs at irregular speed during the calibration procedure.*	➢ Check that the hydraulic motor's proximity sensor is operating correctly. A small light at the cable end of the sensor should flash every time a target tooth goes past (refer to the VRT maintenance section of this manual).

5. *Calibration pulses/kg value is different to previous calibrations with similar product.*	➢ Check bulk density of product is similar to the previous material. ➢ Check material flows freely and is not wet or binding to bin or meterwheels. ➢ Check sprocket ratio and meterbox setup is the same as previous samples. ➢ Check that the proximity sensor is operating correctly.
6. *Monitor will not come off Hold.*	➢ Fan has not been engaged or is running below the low fan alarm.
7. *Monitor comes off hold but metering system does not operate.*	➢ Check monitor display for a ground speed feedback. If no speed is displayed check sensor operation and distance to target on the drive wheel. ➢ Check the fuse attached to the main power loom at the battery. Replace with similar sized blade fuse (20amp).
8. *Reasons why a particular bin does not start.*	➢ Bin is switched off. ➢ Bin is not calibrated. ➢ Some earlier model VRT seeders (pre 2001) are fitted with a blade fuse to protect each electric over hydraulic controller. Check and replace if necessary with similar sized blade fuse (3 amp). Fuses are located along loom on the left-hand side of the seeder, close to the hydraulic manifolds. ➢ Refer to your service agent for further instructions.
9. *A particular bin will not stop or rotates slowly when the monitor is placed on hold.*	➢ Check that the manual override valve is turned off. Refer to the manual override section for more information. ➢ Remove all electrical power to the seeder's pod by disconnecting the main breakaway plugs (switch off monitor first). If the metering system stops the problem is electrical. If the Hydraulic motor continues to turn the problem is related to a hydraulic issue. At this stage it would be advisable to contact your local dealer for more information.
10. *Fan speed will not display or displays erratically.*	➢ Check fan speed sensor is connected. ➢ Rotate sensor in housing and check sensor has 3mm gap to magnet in back face of impeller. Finally, replace sensor.

11. Unable to obtain a set application rate.	➢ Ground speed is too fast for a particular product. ➢ Sprocket ratio may need to be changed from low to high ratio. This is done from the right-hand side of the meterbox. **WARNING!** Switch tractor off before working on the seeder's metering system. Metershaft and motors could turn at anytime. Recalibrate metering system to suit new sprocket ratio. ➢ Meterwheel reduction plates may still be in place, restricting maximum output. ➢ Check meterwheels are not clogged with material. ➢ Check calibration procedure. Compare pulses/kg figure with previously recorded samples. ➢ Check meterwheels are assembled and fitted to the metershaft assembly in the correct orientation & rotate in the correct direction. ➢ Check that the VRT motor and metershaft assembly is rotating in the correct direction (refer meterbox section in manual).
12. Unstable Application Rates displayed on the screen while seeding.	➢ If all application rates are unstable, check ground speed on screen. If speed varies check proximity sensor operation and spacing on wheel target. Refer to the VRT Maintenance section on page 91. Also check that the target mounted wheel bearings are adjusted correctly to prevent excessive wheel play. ➢ If one bin has an unstable rate check that the sprocket ratio is set correctly for the product being sown. Metering system may not be able to obtain rate. Check that the proximity sensor for that particular bin is operating correctly. You can do this from the tractor cab by going to the Drive Ratio screen within the Alarms screen. Refer to the VRT Maintenance section on page 92 for further explanation.

NOTE: If you experience a problem that is not solved by either the monitor's operating manual or the above trouble shooting section contact your local Gason Dealer for further instructions.

Introduction

The LQ series Air Seeder uses VRT liquid metering for the application of various liquid products from single or multiple tanks. This is achieved by hydraulically driving single or multiple diaphragm pumps with control valves integrated with the seeders standard VRT monitor.

General Safety Conditions for Gason Liquid Equipped Seeders

A.F Gason recommends all operators comply with the following safety conditions reducing risk of personal injury or harm during loading, application and cleaning of machine.

We recommend that operators have completed a certified chemical application course before using this equipment.

Operators need to have read labels and the MSDS (Material Safety Data Sheet) supplied with the products being applied and understand all requirements for safe use.

The appropriate PPE (Personal Protective Equipment) needs to be worn by the operator. Ensure all PPE is kept in good condition.

A clean pair of gloves and suitable eye protection needs to be carried at all times for emergency use.

The flush tank needs to be filled with good quality clean water for hand and -face washing. Water taps are positioned on each side of Liquid Equipped Seeder.

Do Not Drink water from the flush tank.

Do Not Enter liquid tanks without washing tank thoroughly prior to entering and ensuring adequate ventilation. Never enter tank without a second person present.

Always keep the seeder in good condition. Regularly check tanks, hoses and pumps for leaks. Replace components before failure occurs.

Fig.L1 2150FT LQ with optional loading/unloading auger.

General Start Up Instructions

Place at least 200 litres of liquid in the tank ensuring main supply taps are switched on before operating. Pumps should not be operated dry for more than 2 minutes.

Connect the liquid pump hydraulic hoses to the tractor. Note the pressure line is marked with a red tie. Reduce the hydraulic flow setting from the tractor before engaging.

The Canlink 3500 Monitor can be set to display pump speed by selecting Fan 2 on the main screen. For pump speed see Table L2.

Low Application Rates	300 – 350 RPM
Medium Application Rates	350 – 400 RPM
High Application Rates	400 – 450 RPM

Table L2

During initial start-up, the main pressure gauge on the pump unit should read below 1 Bar. The pressure gauge on Pump 2 (if fitted for Extra Agitation) should read between 3 and 5 Bar. For further information on high system pressure refer Trouble Shooting section.

Operating Machine

Pot testing of liquid products. To ensure compatibility of liquid products being used in the Liquid Equipped Seeder it is recommended that the operator perform a compatibility test also referred to as a liquid pot test or jar test. To do this use a bucket or jar mixing a small sample of each chemical including water in the same proportion and order as the mix to be applied. The bucket/jar is then left to stand for several hours and observed to determine compatibility. If products separate or crystals are formed then it may be necessary to review mixture.

Tank mixing additives. When additional chemicals are added directly to the seeder's tanks, always add an equal quantity to both tanks. If additional chemicals are added to 1 tank only, allow at least 45 minutes of pump operation before applying product.

Cleaning filters. Filters need to be cleaned regularly. Efficient operation will occur if filters are kept clean. Refer table for filter specification:

Suction Filter	32 Mesh
Pressure Filter	50 Mesh
Distribution filter	100 Mesh

Table L3

Distribution flush procedure. The following procedure will reduce the amount of fresh water transfer into the main fertilizer tanks.

1. Set the liquid pump speed to approximately 100 – 200 rpm by adjusting the oil flow at the tractor. (Running the pump at a slow speed will keep pressure below 6 Bar and ensure PRV doesn't send fresh water to the fertilizer tanks).

2. On the monitor.

a) Go to the 'RATES' page.

b) Select 'BIN 1' (liquid tank) to be flushed.

c) Press 'CALIB PROD' to go to the Product Calibration page.

d) Press 'FLUSH' this will close the bypass valve and open the shutoff valve directing all flow to the implement. Note: product will start flowing through to the implement.

3. Leaving the tractor, switch the pump source selector valve on the seeder to 'CLEAN WATER'.

Fig.L4

4. Once the flushing is complete the operator can turn the pump off at the tractor, press the 'FLUSH' soft key and 'EXIT' soft key to return to main screen on the monitor. Before operating the seeder again it will be necessary to switch the tap back to 'PRODUCT' and reset the pump speed.

Flushing. It is advisable to flush the pump and distribution system at the end of each day's use with clean water. The tanks are also fitted with sprinklers for rinsing when changing products or cleaning seeder.

Calibration Procedure.

1. Select new trip (paddock) or reset a previously used trip. Reset trip as follows: (Starting from the main screen)

a) Press 'RECORDS' key. Records for the current trip will appear.
b) Press 'RESET' key twice to clear trip records or select new trip.

2. Go to 'RATES' page: Press CAL to enter Calibration Menu.

a) Select 'BIN 1' (liquid tank) to be calibrated.

b) Press 'SELECT PROD' to chose product for that bin (e.g. UAN).

c) Input application 'RATE' (e.g. 50 L/HA).

d) Input increment steps 'STEPS' (e.g. 5 L/HA).

Press 'CALIB PROD' to go to the Product Calibration page.

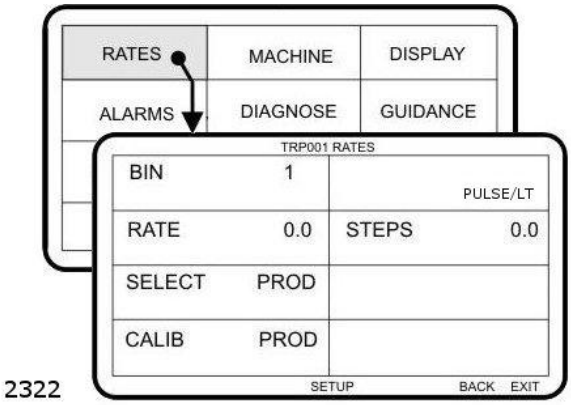

Fig.L5

3. When in the Product Calibration page it is possible to set the following:-

a) 'CAL SPEED' should be set to a default setting of 4. When calibrating ensure system pressure is between 1.5 and 4 Bar. If pressure is too low, increase 'CAL SPEED' setting. If pressure is too high, decrease 'CAL SPEED' setting.

b) 'TEST PULSES' Default setting is 600. If the container overflows reduce the number of 'TEST PULSES' on monitor and re-run test. It will be necessary to go back one page and re-enter the product calibration page before making changes.

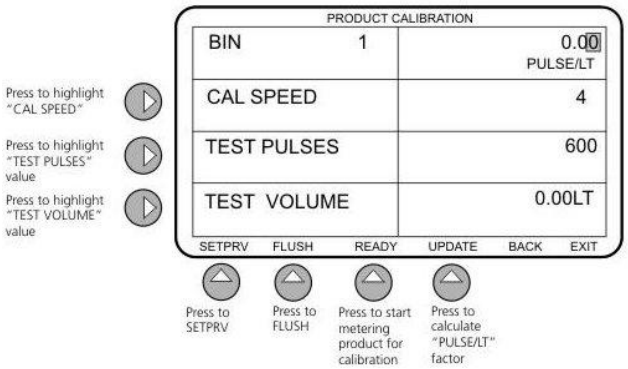

Fig.L6

4. To begin calibration procedure:

a) Press 'READY' to proceed. ('TEST PULSES' will now be displayed as zero and

will show feedback from seeder when test is running)

b) Engage tractor hydraulic to run the liquid pump/s. Ensure pump is running at desired operating speed e.g. 400rpm. See table on page 1 for pump speeds.

c) Prime the system for the first test by pushing the green button on the calibration control box at the seeder. When liquid is flowing consistently, push the red button to stop. This will reset the 'TEST PULSES' count to zero on the monitor next time the green start button is pushed.

d) Place a collection container under 1 of the outlets on the tine. It is advisable to check more than 1 outlet by running multiple tests to check accuracy between outlets. Inconsistent wear in distribution components could create variations in sample sizes.

e) Push the green button the seeder to start calibration test. Allow system to stop by itself then press the red button to lock the pulses at its current figure. Be aware if the red button is not pushed, excess pulses may be returning to the monitor decreasing accuracy of the calibration.

5. Place measuring container on level surface and take volume measurement for the sample taken from 1 outlet. (Take care, small errors in reading measurement will decrease accuracy).

6. Sample volume is then multiplied by the number of outlets on the machine. Record the sample volume in the 'TEST VOLUME' area on the calibration page.

7. Update the 'PULSES/LT' by pushing the soft key under the 'UPDATE' prompt. As a guide the 'PULSE/LT' should be between 82 and 85.

Note: If a product that has been previously calibrated for another trip is selected, the 'PULSES/LT' figure will already be assigned to that product. The operator can either use this figure if product is the same specifications or can retest using the standard calibration procedure as per above.

Fig.L7 2150FT in the field.

Liquid Trouble Shooting

Problem	Possible Solution
1. Pump does not start.	➢ Check hydraulic hoses are fitted correctly to the tractor remotes. ➢ The hydraulic motor driving the pump is speed restricted and direction of flow protected. If the pump does not run, reverse the flow or hydraulic hose connections at the remotes.
2. Pump operates but does not pump.	➢ Check taps from main tank are open. ➢ Check camlock couplings connecting pump to tank are connected. ➢ Check taps on pump unit are set to 'PRODUCT' and 'OPERATE'
3. Valves not operating correctly.	➢ To check default valve position, enter the calibration screen. When the calibration screen is entered the bypass valve will always return to the 'open to tank' position and the shutoff valve 'closed to bar' position. See diagram.
4. High System Pressure when on HOLD.	➢ In the 'SETUP MENU' highlight the liquid tank 'BIN 1' and press 'SELECT'. Next highlight the HOLD setting and use the navigator keys to change from the default setting 'STOP' to 'CLOSE'. 'CLOSE' setting will allow the bypass line to return flow to the tank at lower pressure when the monitor is placed on HOLD. Note: recovery time to re-establish application rate will be longer when using the 'CLOSE' setting.

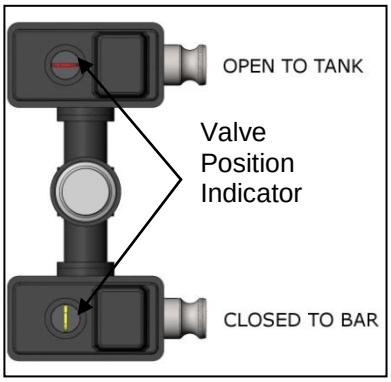

Fig.L8

5. Cannot achieve required rate

- Change the restriction in the distribution system. Increase or decrease the size of the flow restrictor/orifice plates to upper and lower rate limits.
- Change the pump speed. Changing pump speed will move the upper and lower rate limits.

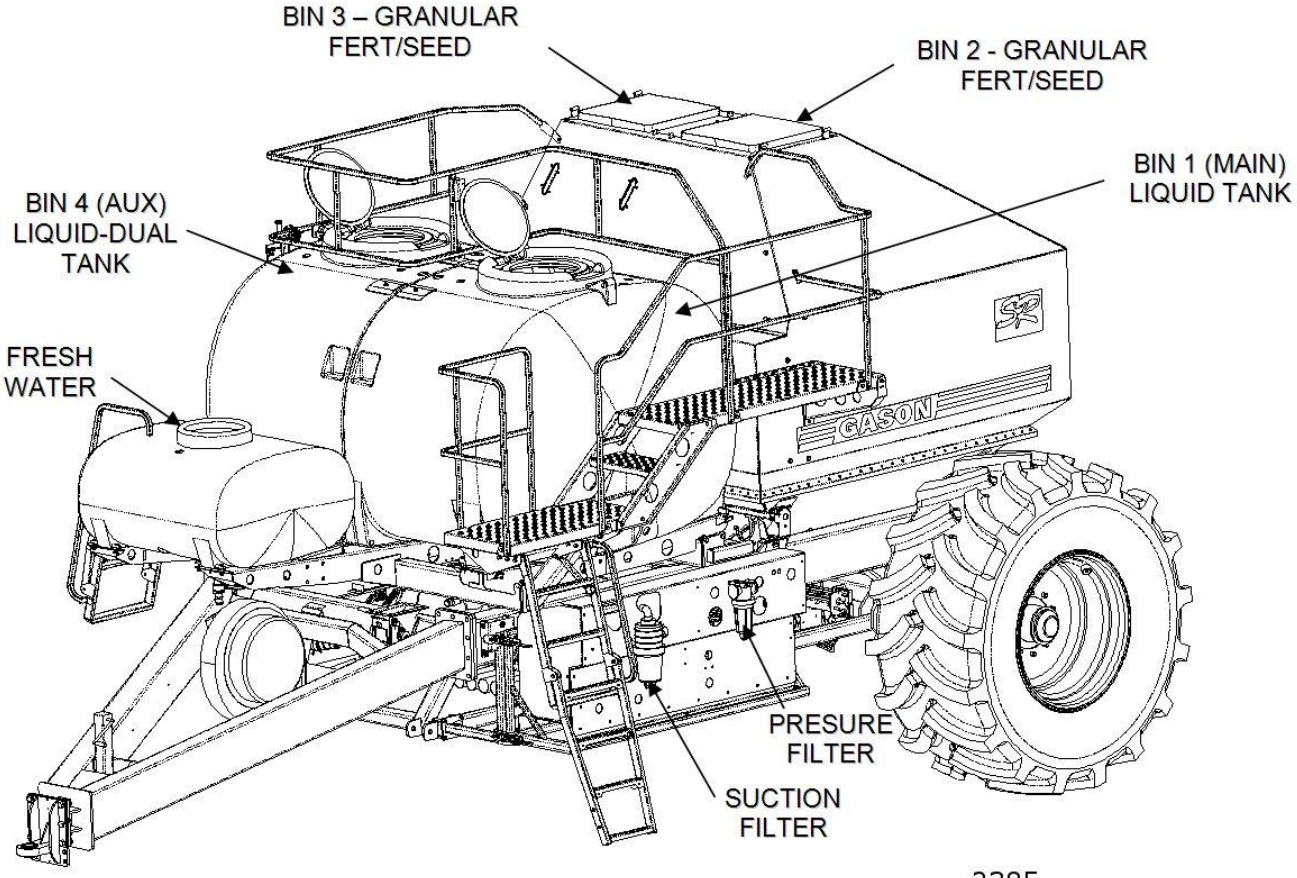

2150FT LQ SERIES SHOWN

2385

Fig.L9

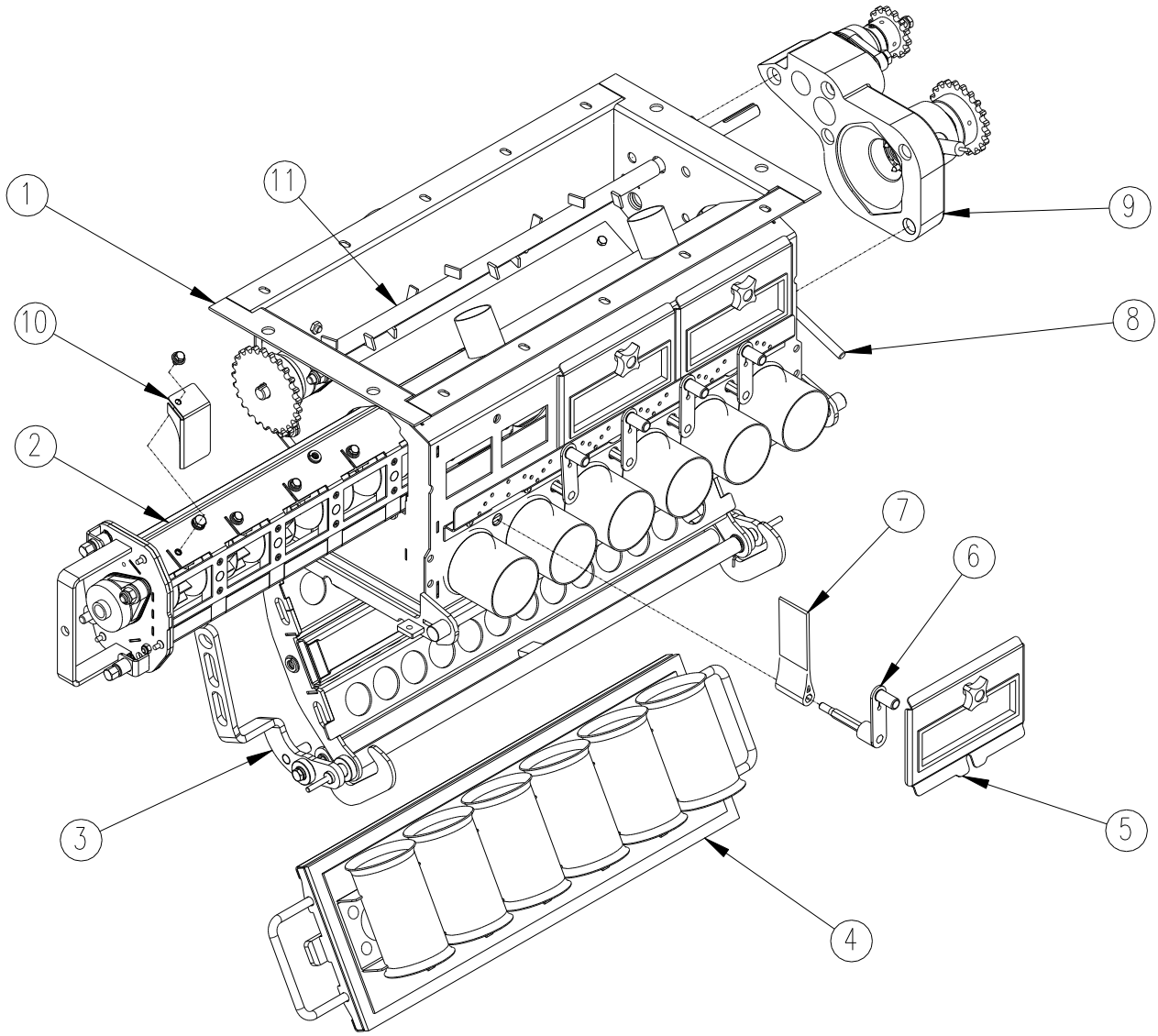

ITEM	DESCRIPTION
1	SR METERBOX ASSEMBLY
2	SR METERSHAFT ASSEMBLY
3	HATCH FRAME ASSEMBLY
4	HATCH ASSEMBLY
5	WINDOW ASSEMBLY
6	DIVERTER LEVER
7	DIVERTER BLADE
8	TRAPDOOR HANDLE
9	DRIVESHAFT HOUSING ASSEMBLY
10	METERWHEEL REDUCTION COVER PLATE
11	AGITATOR SHAFT

2120

Fig. M1 SR Meterbox Assemby.

SR Meterbox Assembly

The SR Meterbox assembly creates the base structure to enable various configurations in sowing requirements to be achieved. The base structure allows for a maximum of 6 primary delivery tubes. It can also be supplied as a 4 outlet meterbox as standard from the factory.

SR Meterbox Features

The SR Meterbox has been fitted with adjustable diverter blades to allow for partial or total diversion of material from one meterwheel to an adjacent primary delivery tube (refer fig. M2).

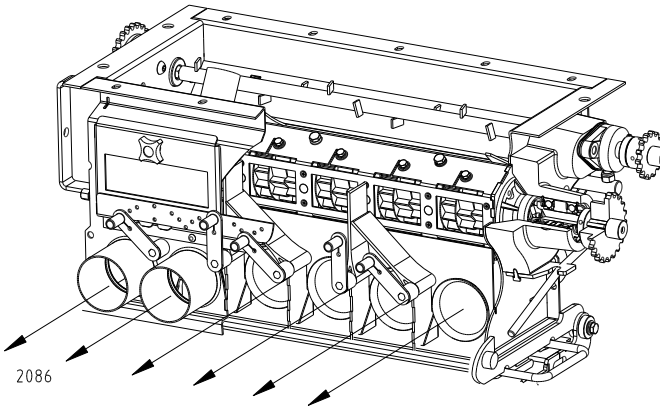

Fig. M2 Diverter blades set to one side.

Removable clear window assemblies located on the rear face of the meterbox allow access to the meterwheels while product is in the bin. The windows will also give visual confirmation of the diverter blades orientation.

The hatch frame assembly is used to hold the hatch assembly in place at the bottom of the meterbox. The hatch frame can be opened when product is in the bin by rotating the hatch frame handle downwards and towards the rear of the seeder. The securing hooks can then be lifted from the catch pins, allowing the hatch to rotate forwards.

The hatch frame can be rotated forward and upwards to lock into a near horizontal position to give maximum access to the underside of the meterbox.

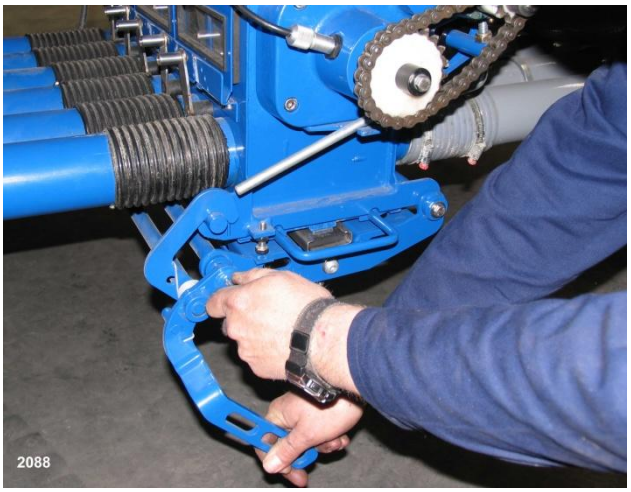

Fig. M3 Hatch frame being opened.

Note: A yellow safety catch situated forward and to the right hand side of each meterbox should be engaged if someone is working under the machine.

Engaging the safety catch prevents the hatch handle from being rotated, which inturn releases the hatch from its fully open position (refer fig. M4).

Fig. M4 Safety Catch Operation.

The hatch frame will generally hang vertically down when calibrating the meterbox, and locked horizontally when emptying material from the bin.

To gain maximum ground to under meterbox clearance, it may be necessary to

slide the hatch assembly out from the right hand side of the machine.

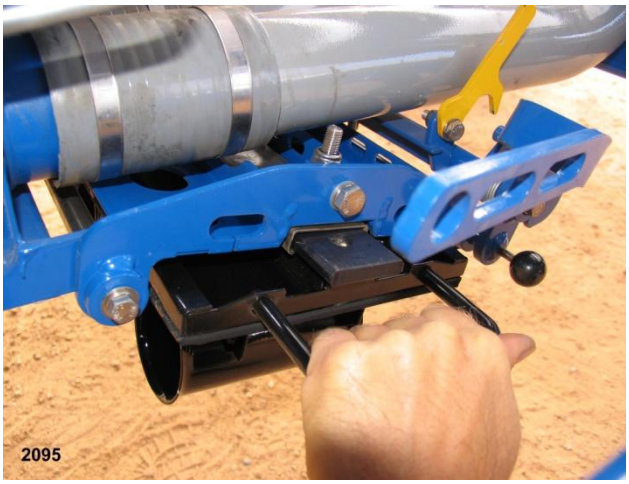

Fig. M5 Hatch Assembly Removal.

Trap Door Operation

To empty the bin of product, simply open the meterbox hatch and operate the trap door using the handle on the right hand side of the seeder.

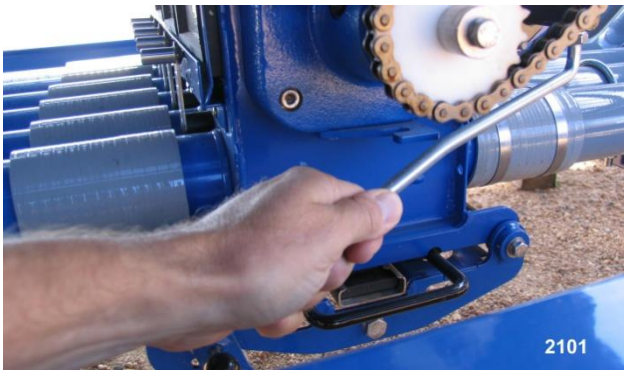

Fig. M6 Trapdoor handle.

Low Rates (Meterwheel Cover Plates)

If extremely low rates of material flow are required (eg. canola and sorghum) it will be necessary to fit a meterwheel reduction cover plate into the metershaft assembly housing.

This needs to be fitted before the seed is loaded into the bin. Fitting this plate will effectively reduce the output by 2/3rd's. Refer to page 110 for detailed instructions on fitting the plates.

High Rates (Sprocket Ratio)

It may be necessary to alter the sprocket ratio on a particular meterbox to allow the various application rates to be sown. Refer to page 63 for information on ground driven seeders and page 77 for VRT equipped air seeders.

DO NOT use a 'High Rates' sprocket ratio on ground driven air seeders if it is not recommended in the 'Variator Setting guide' (refer pages 41–55).

Fig. M7 Sprockets on right hand side of meterbox.

Reducing the Primary Outlets

When setting up the seeder system for either standard seeding on a narrow bar, wide row (summer) cropping or deep banding, you may need to:-

- fit or remove some of the meterwheel assemblies (refer page 108);
- blank off the unused ports in the metershaft assembly housing (refer page 110);
- block the air flow on the unused primary tubes (refer fig.M9 on page 105 and page 111).

DO NOT leave meterwheels in metershaft assembly housing if not actually conveying

material. Refer page 98 for information on removal procedure.

Any work to the meter system must be carried out with the bins empty to allow removal of the metershaft assembly.

Large Seeds

The standard metershaft assembly will meter a variety of seeds from canola to peas. It will not however meter faba beans, chick peas, broad beans or other large seeds. To confirm the actual suitability of the standard metershaft assembly it is suggested that a small quantity of seed be placed in the bin and that the metershaft be turned over by hand. If excessive seed damage, cracking of seed, occurs or if the metershaft does not turn smoothly it will be necessary to use a **Large Seeds / Broad Beans** metershaft assembly.

Fig. M8 Large seeds metershaft assembly.

Contact your Gason dealer for more information.

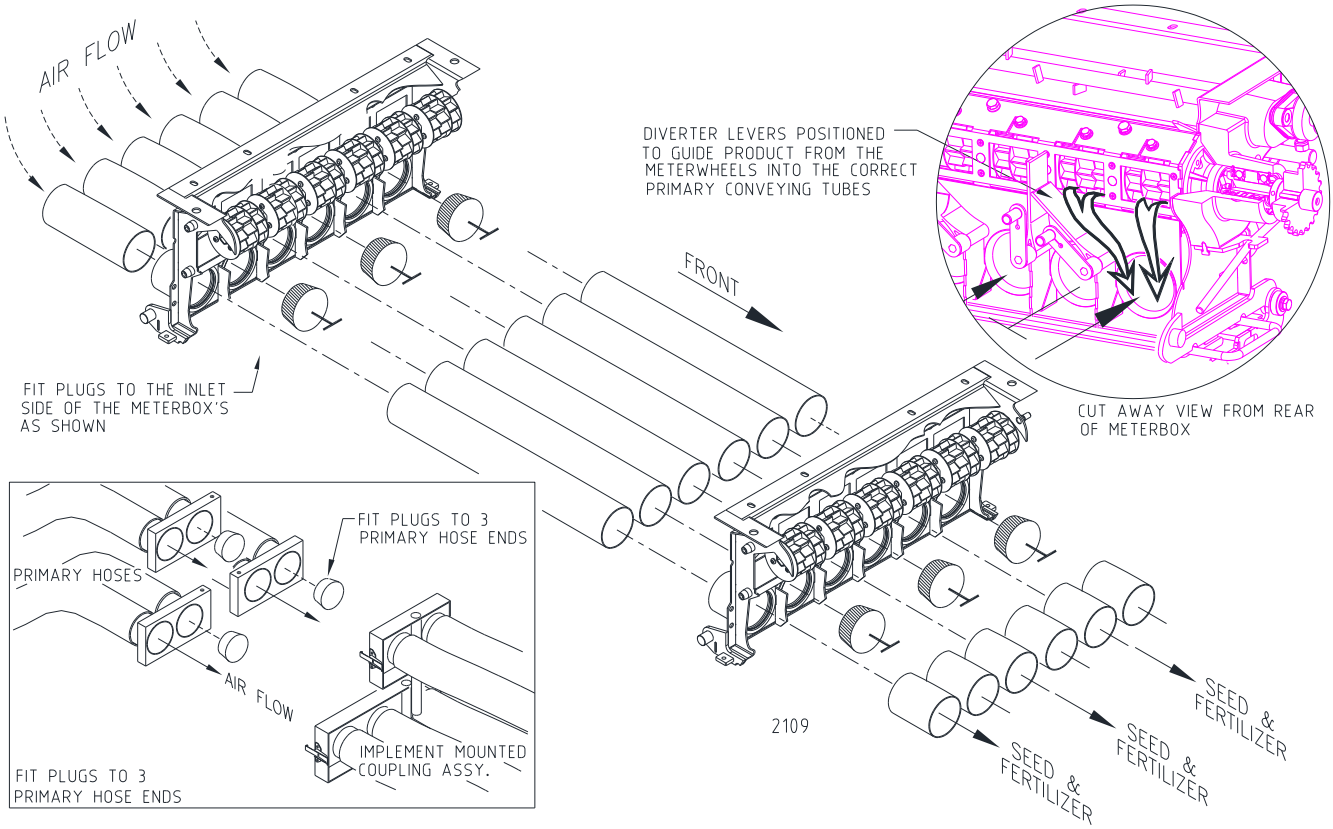

Fig. M9 Possible example for wide row (summer) cropping using diverter blades to direct product down 3 of the 6 primary tubes and plugging air flow on the un-used primary delivery tubes.

Deep Banding

Changing from conventional planting to deep banding can be as simple as using the handles on the rear of the meterbox to rotate the position of the diverter blade. For example, where all product may have been conveyed down 3 of 6 primary tubes for conventional planting, this is now altered by sending one product down the same 3 tubes and a second product down 3 different primary tubes.

The distribution system will need to have been set-up to run the dual hoses and heads required for deep banding. Refer to Fig. M11 for one possible configuration of the meterbox.

Triple Shooting

To run a triple shoot system it will be necessary to have a specific distribution set-up that will allow the placement of the three separate products all the way through to the implement. This can be performed by using a deep banding sowing boot on the tines and fitting a urea spreader kit to the front of the implement.

The meterbox will also need some adjustment to separate materials from the 3 bins. By diverting the product from some meterwheels to specific primary conveying tubes we can ensure that the correct product is sent to the specific areas on the implement (refer Fig. M12). Refer to page 108 for details on removing meterwheels and fitting cover plates.

Partial Diversion

It is also possible to mix some product (fertilizer) with the seed or another fertilizer while metering. The diverter blades can be partially moved and held in position by using the detent on the plate under the diverter handle.

The detent plate has 2 positions for partial diversion. The 2 detents will divert approximately 33% or 66% of the product from one meterwheel to an adjacent primary tube. The operator should check the exact percentage of product diverted during the calibration process. The percentage can be affected by product type and application rate.

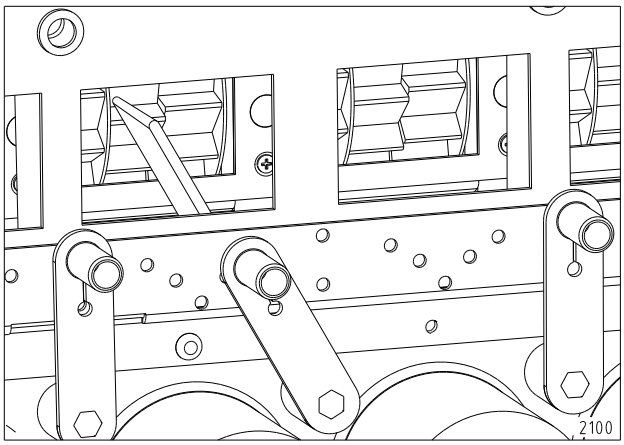

Fig. M10 Diverter blade and detent plate.

To determine the total diversion of product to the different primary tubes you will need to calculate the percentage of the combined meterwheel output.

Example

A detent handle for one meterwheel has been moved to the first position (refer figure M10 above). This means that approximately 33% of one meterwheels output will be placed with the adjacent meterwheels total output. To calculate the total material placement for the 2 primary tubes you will need to perform a simple calculation.

(33% + 100%) / 2 = 66% of total product down one primary tube and 66% / 2 = 33% of the remaining product down the second primary tube.

Fig. M11 A 2 Bin Model shown with diverter blades in deep banding position. Use as a guide only.

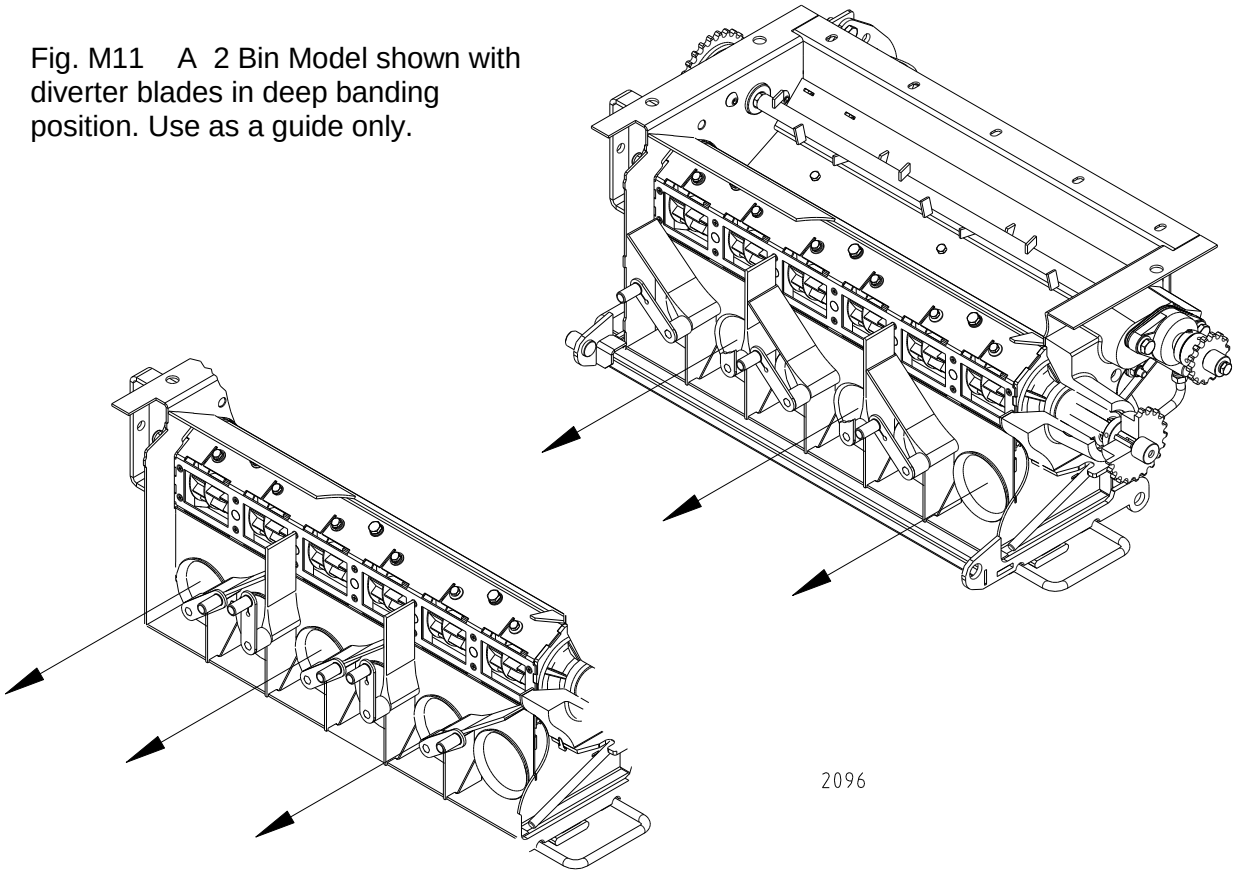

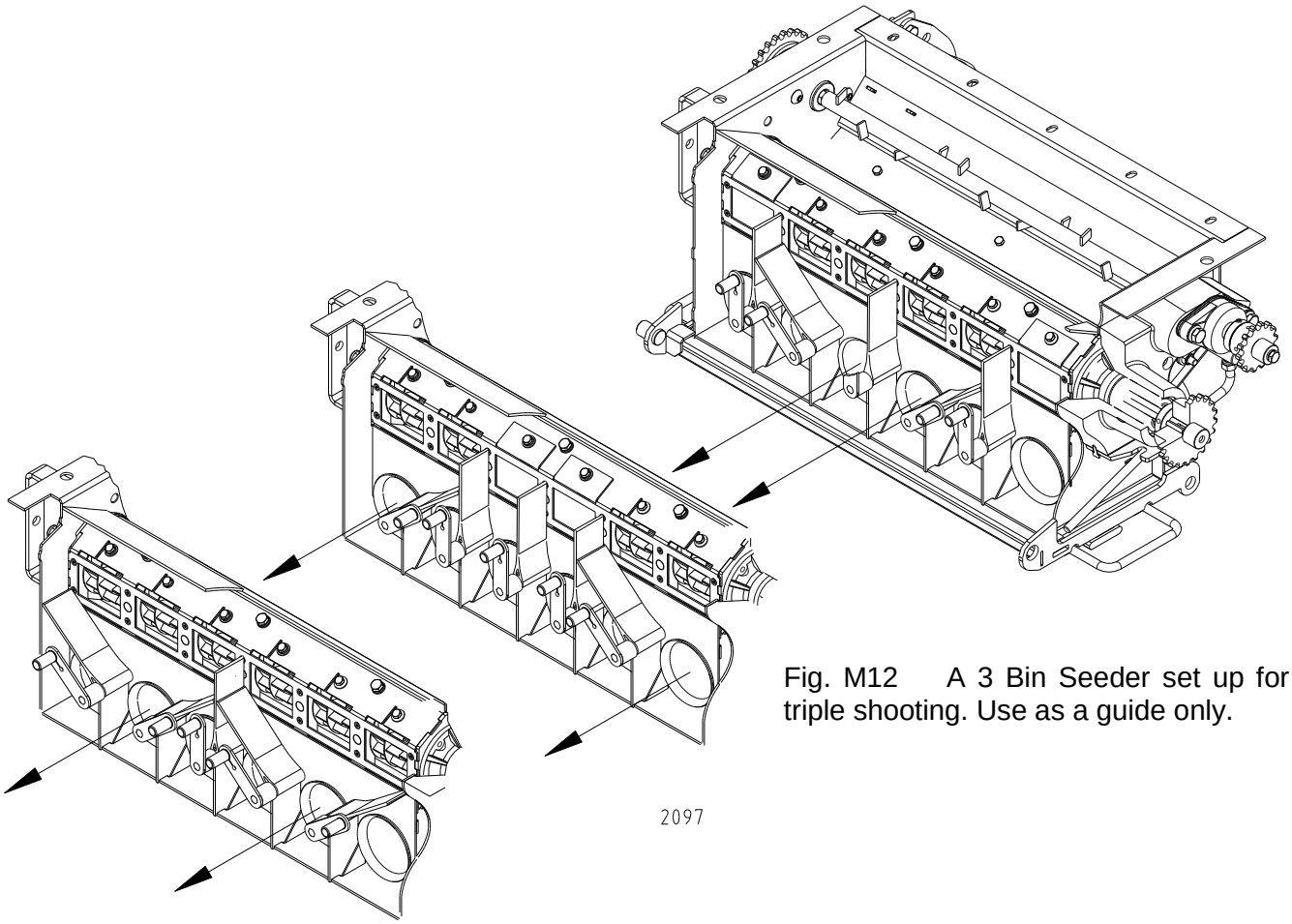

Fig. M12 A 3 Bin Seeder set up for triple shooting. Use as a guide only.

Removing Metershaft Assembly

1. Ensure that the bin is empty before attempting to remove the metershaft assembly.
2. Undo the 2 captive nuts on the left hand side of the meterbox using the Tee wrench supplied.
3. Use the tapered end of the Tee wrench's handle to release the metershaft assembly seal against the side of the meterbox.

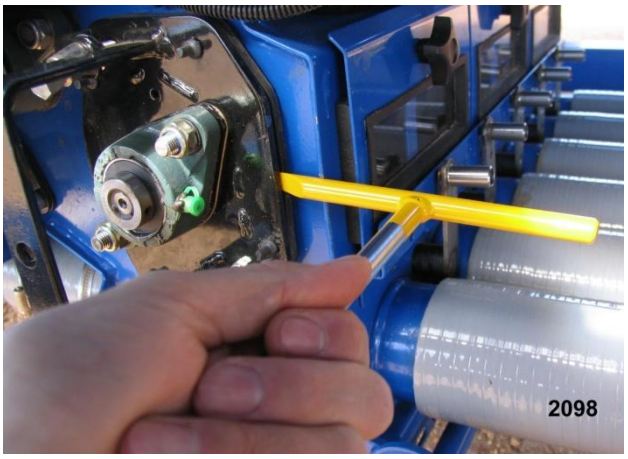

Fig. M13 Tee wrench releasing seal pressure.

4. Grip the handle and pull the metershaft assembly outwards. The assembly should slide out freely. If the assembly jams or is hard to remove check that the diverter blades are not restricting movement and release the trapdoor handle to reduce pressure under the metershaft assembly.

Fig. M14 Removing the metershaft assembly.

Assembly is a reversal of this procedure.

Note: When refitting the metershaft assembly check that:

- ***The metershaft nose bearing has been greased*** *(refer page 113).*
- ***The drive pin has engaged correctly.***
- ***The diverter blades are still in the same position as required.***

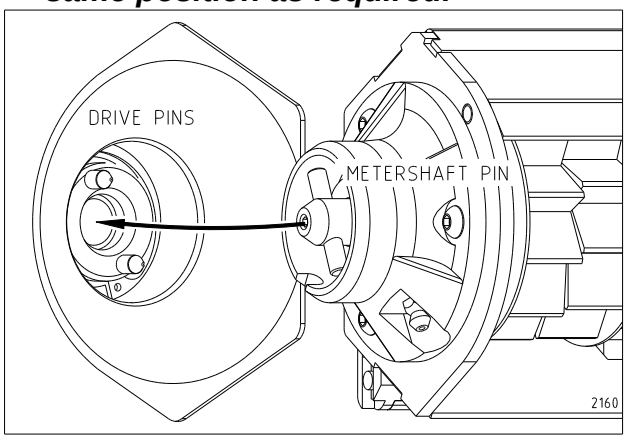

Fig. M15 Ensure Drive pins & metershaft pin miss each other when engaging.

Removing Meterwheels

1. Remove metershaft assembly from meterbox as previously described.
2. Clean metershaft assembly. If necessary use a high-pressure wash with detergent.

Note: Take care not to spray water directly at the bearings and shaft seal.

3. Undo the 2 grub screws in the collar of pillow block bearing (handle end) that retain the metershaft. Note the distance that the end of the shaft is in the bearing. In most cases the shaft will be flush with the end of the bearing collar.

Fig. M16 Grub screws on metershaft bearing.

4. *Undo and remove the 3 button head screws that are used to retain the plastic nose assembly to the driving end of the metershaft.*
5. Slide the metershaft and nose assembly out away from the handle end. It may be necessary to use a long drive pin punch through the hole in the handle to start the metershaft movement.

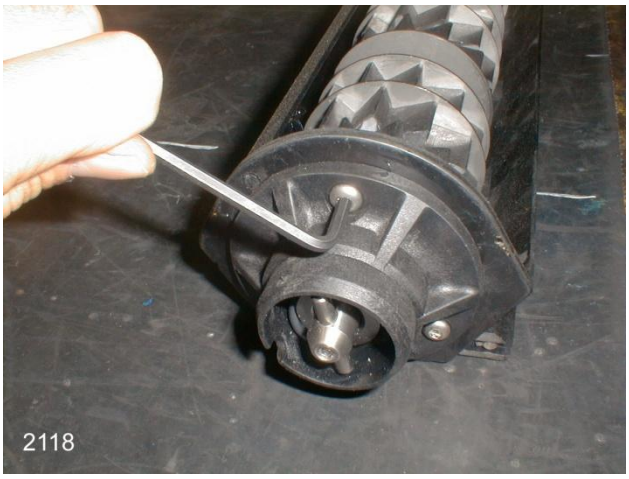

Fig. M17 Removing screws from drive end.

6. As the metershaft moves out and away from the housing the meterwheels can be removed one at a time.

Fig. M18 Withdrawing metershaft from housing.

Assembly is a reversal of this operation.

Before rebuilding the metershaft assembly check that the bearings turn freely. The bearing in the nose assembly will be firm to turn but should rotate and feel smooth in its operation. If excessive force is required, or a bearing feels rough when rotating replace bearing before re-assembly.

Clean hexagonal metershaft of product build up to allow the meterwheels free movement along the shaft.

Check that the meterwheels are in good condition & not worn before re-assembling.

Check that the vertical spacers attached to the housing are not excessively worn and are still functional. The vertical spacers are used to retain the meterwheels in position. Replace individual units if required.

Fig.M19 Checking vertical spacer for wear.

Check that the drive pin on the end of the shaft is in good condition.

Fig.M20 Drive pin in end of metershaft.

IMPORTANT NOTE:
Meterwheel assemblies must be fitted to the shaft in the correct direction to allow the material to flow when the shaft is operating (refer Fig. M21).

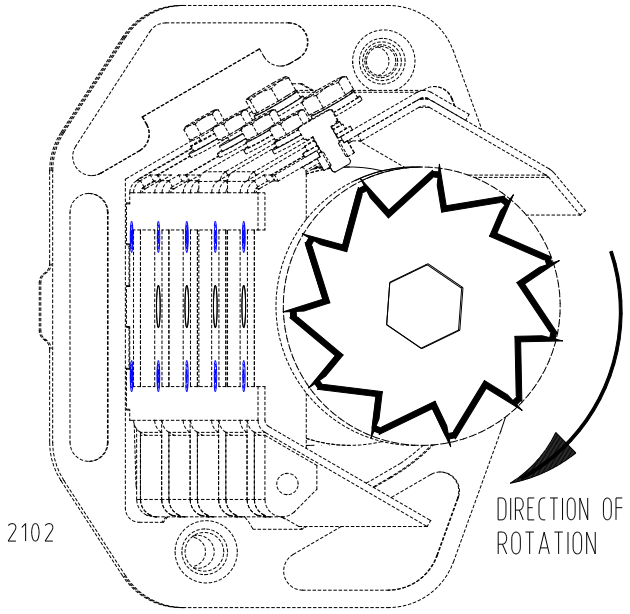

Fig.M21 Meterwheel Direction.

Blanking Metershaft Housing
(refer Fig. M22)

Note: Only to be fitted when meterwheels have been removed from the metershaft assembly.

1. Remove metershaft assembly from meterbox as previously described.
2. Remove the appropriate meterwheel from the metershaft.

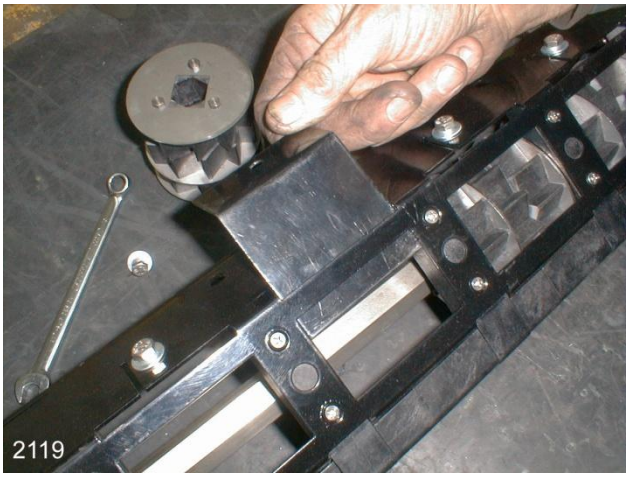

Fig. M22 Cover plate being fitted.

3. Remove the M6 screw on the top face of the metershaft assembly housing directly above the port to be blanked.
4. Slide the meterwheel blanking cover plate into the open port from the top and refit M6 screw and washers.

Fitting Meterwheel Reduction Cover Plates

1. Remove metershaft assembly from meterbox as previously described.
2. Remove the M6 screw on the top face of the metershaft assembly housing directly above the meterwheel.
3. Slide the meterwheel reduction cover plate (painted yellow) into the open port from the top and refit M6 screw and washers.

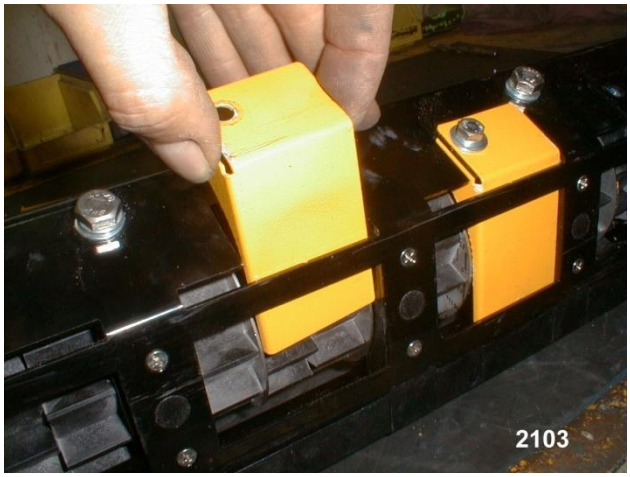

Fig.M23 Meterwheel reduction cover plate.

NOTE: Cover plates need only be fitted to the meterbox required to meter the low rates. Maintain symmetrical material flow from the bin to the appropriate conveying tubes.

4. After fitting cover plates check that the metershaft turns freely. If the shaft jams, inspect each cover plate to meterwheel disc for clearance.
5. Refit the metershaft assembly into the meterbox.
6. When calibrating the seeder with the reducing cover plates in place, ensure that there are even piles of material in the calibration tray. This check will

confirm that the sleeves have been fitted correctly.

Removal of the reducing cover plates is a reversal of this procedure.

NOTE: Do not use reducing sleeves in a bin metering fertiliser or large seeds. Damage may occur to the sleeves and meterwheel assemblies.

High and Low Rate Sprocket Ratio

The Ground Drive and VRT Hydraulic Drive metering systems use a different method and reason for changing sprocket ratios. Refer to the relevant sections (page 63 or 77) in this manual for further information.

Fig. M24 Sprocket Ratio being changed.

Blocking Air Flow

The meterboxes have been designed to run 4 or 6 primary hoses as standard. However, the meterbox is flexible enough to enable many variations in its metering configuration. In the case of the 4 outlet meterbox configuration, it can be used as a 3 outlet machine to suit narrow planting widths, or as a 2 outlet system to perform wide-row planting (common for summer crops).

It may be necessary to fit plugs to the unused conveying tubes to ensure airflow has been controlled and restricted. Plugs are fitted from the inside of the meterbox. The plugs should be fitted to all meterboxes and the primary hose coupling assembly (refer figure M9 on page 95).

Airflow turbulence will occur inside the meterbox if a plug has been incorrectly located. This turbulence may create uneven or excessive material flow when sowing light seeds or product at extremely low application rates.

To fit the plugs, first open the meterbox hatch. Firmly press the red plug, as supplied with the seeder, into the inlet tube towards the blower as shown in figure M25. The plug's placement must prevent air from entering the meterbox.

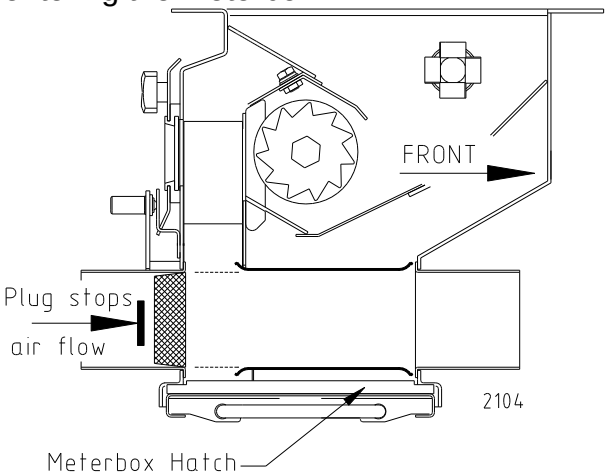

Fig. M25 Meterbox Cross Section on a Rear Tow Air Seeder. Reverse the plug location on Front Tow Seeders.

VRT Hyd. Motor Direction of Rotation

The VRT hydraulic motor must rotate in the correct direction to ensure reliable performance during operation.

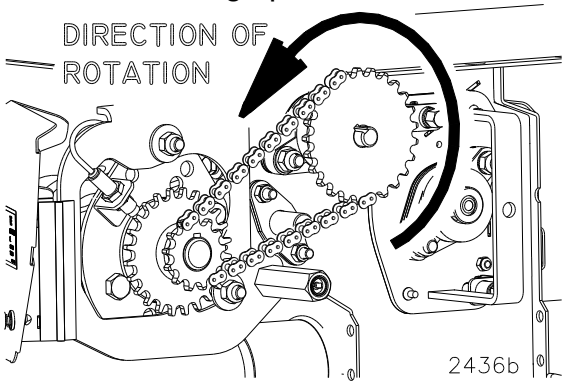

Fig. M26 VRT Hyd. Motor Rotation.

Metering Oats

It will be necessary to remove the cover plate that protects the meterwheels when metering oats. The cover plate is normally used to prevent material from sitting directly on top of the meterwheels and helps prevent the free flowing of product while the meterwheels are stationary. Removing the plate will help prevent the product from bridging.

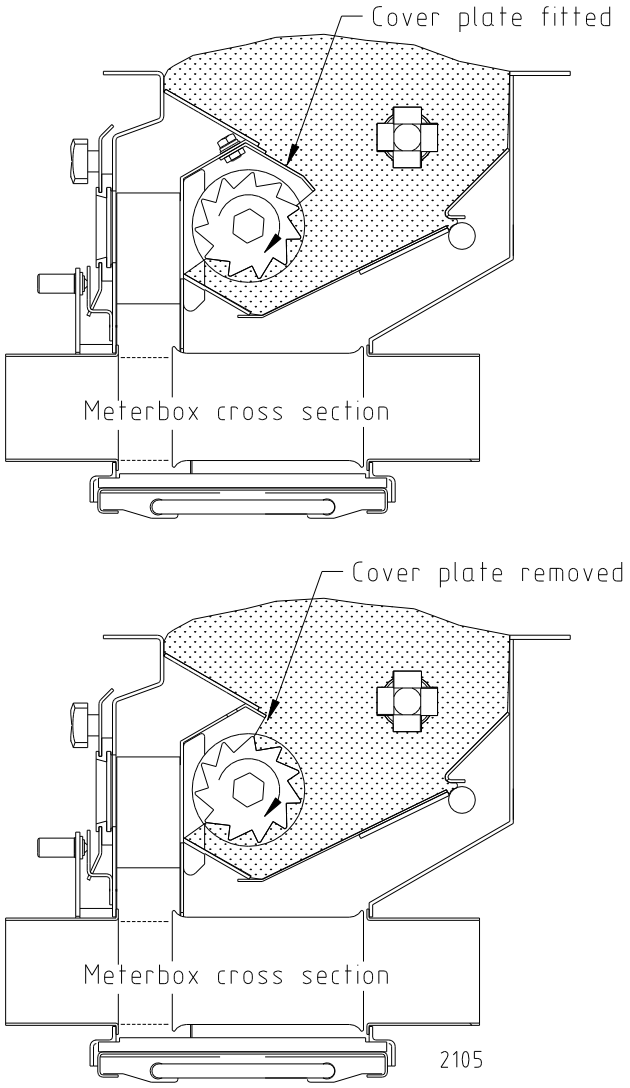

Fig. M27 Removing the Metershaft Cover Plate.

We recommend that the oats are clipped and graded as a normal procedure before planting.

A trial run may be required to ensure that you do not have a problem during seeding. To check for bridging it will be necessary to place a known weight of product into the bin and to start the seeding operation. After a known area has been seeded, eg. 10 hectares, stop and check that the bin has the correct reduced quantity left.

The plate ***MUST BE REPLACED*** after seeding oats to prevent damage from occurring to the metering system.

To remove the meterwheel cover plate you will need to have the bin empty and the metershaft assembly removed from the meterbox as previously described. Remove the 3 x M8 Bolts that retain the plate located on the top of the metershaft assembly. Fitting the plate is a reversal of this procedure.

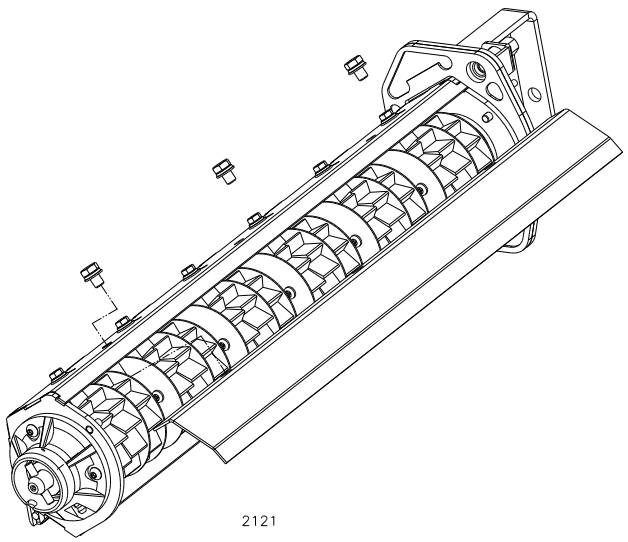

Fig. M28 Removing the Metershaft Cover Plate.

Fitting Broad Beans Metershaft Assy

1. Remove metershaft assembly from meterbox as previously described.
2. Slide in the broad beans metershaft assembly checking the engagement of the drive mechanism.

NOTE: The ***'Broad beans Metershaft Assembly'*** should only be used for large seeds. Refit the standard metershaft assembly for all other seeds and fertilizers.

Bearing Replacement in Nose Assembly

The metershaft assembly is fitted with a special bearing at the drive end of the shaft in the nose assembly. This bearing requires regular greasing, as do the other metershaft bearings, and should be inspected for serviceability at the beginning, end and at least once during the middle of the planting season.

To inspect the bearing simply remove the metershaft assembly housing from the meterbox as previously described and rotate the shaft by hand. If there is a resistance in turning, or the bearing does not turn with the shaft, remove the nose assembly for closer examination.

To remove the Nose assembly:

1. Remove the drive pin from the end of the metershaft by undoing the grubscrew and pushing the pin out through the slot in the plastic housing.

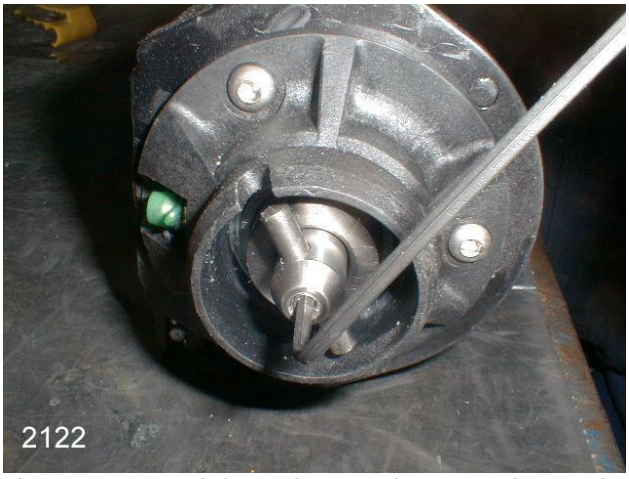

Fig. M29 Undoing the grubscrew from the metershaft assembly.

2. Remove the 3 button head screws that retain the nose assembly to the metershaft housing and remove the nose assembly from the shaft.

3. Hold the assembly in one hand and rotate the bearing.

4. If the bearing feels rough as it rotates replace the bearing by removing the 3 phillips head screws from the steel plate and pushing the bearing out

Fig. M30 Checking the bearing.

5. Replace bearing if necessary and refit bearing and nose assembly. Grease the bearing and check that grease is expelled from the bearing. Two pumps of the grease gun should be sufficient. **Do not over grease the nose bearing**.

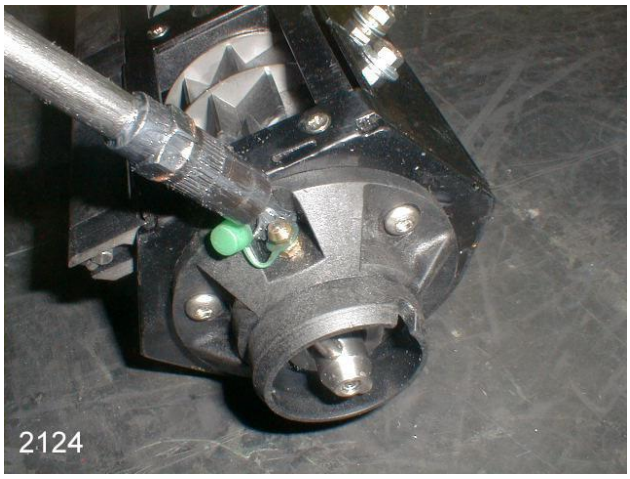

Fig. M31 Greasing bearing in nose assembly.

Assembly is a reversal of this procedure.

Introduction

The hydraulic motor that drives the air seeder blower is a robust and highly efficient unit. It has been chosen because of its ability to operate at high speeds for extended periods.

The hydraulic circuit has also been designed to operate for extended periods with minimal maintenance. The only component that will require regular maintenance is the high capacity oil filter.

Refer to the hydraulic filter maintenance section for servicing information (page 117).

Flow Control Valve

A flow control valve is located near the fan. The valve can be used to adjust the fan's speed and will protect the motor against excess flow from the tractor. The valve will also protect the system from incorrect direction of flow in case the hoses are connected in reverse.

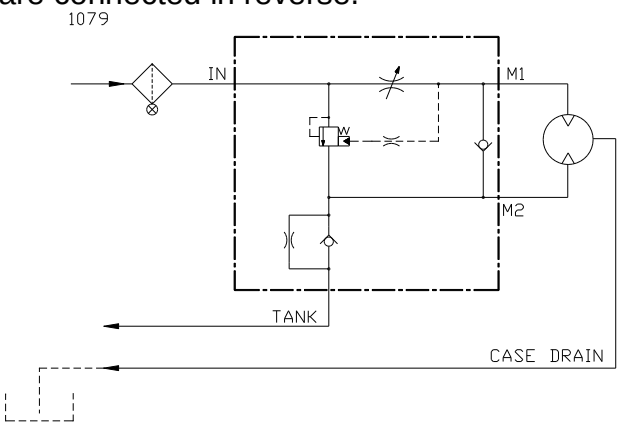

Fig.H1 Hydraulic layout sketch.

Tractor Requirements

A standard tractors hydraulic system in good working order with a cooling system is all that will be required to run the Air Seeder. In most cases no modification will be necessary other than having 2 hoses fitted directly to the tractor's hydraulic reservoir for return flow.

The flow required to operate the air seeder will vary depending on the specific model and options.
Refer to table H2 to determine the flow requirement for the particular model air seeder. The tractor will need to obtain this flow at 160 bar (2350 psi) to achieve the indicated fan speed when conveying product.

	Ground Drive		VRT Hyd. Drive	
FAN RPM	4000	4500	4000	4500
L / MIN	48	54	68	75
GPM (US)	12.7	14.3	18	19.8

Table H2 6 Outlet Meterbox hyd. requirement.

Open Centre Tractor Hydraulics

It is preferable to have a slightly higher flow rate going to the seeder's system when the tractor is equipped with open centre hydraulics. This slight excess will help maintain constant fan speed and reduce the risk of material blockages in the distribution system.

Control the required fan speed at the seeder using the flow control valve (fig.H3).

Closed Centre Tractor Hydraulics

Some closed centre hydraulic systems that compensate pressure and flow will require a specific set-up procedure to control the fan speed and to eliminate possible fluctuations in fan speed.

It is necessary to control the fan speed from the tractor instead of the flow control valve on the seeder.

Use a set of remotes on the tractor that has some form of control device fitted as standard. Set the seeder flow control valve to its maximum position, against the stop, and lock into place.

With the system running it will now be possible to set the desired fan speed at the tractor.

You should consult with your local dealer for further details regarding your specific tractor's hydraulic needs.

NOTE: It is important that the operating temperature of the oil does not exceed 90°C. Damage may occur if operated above this temperature.

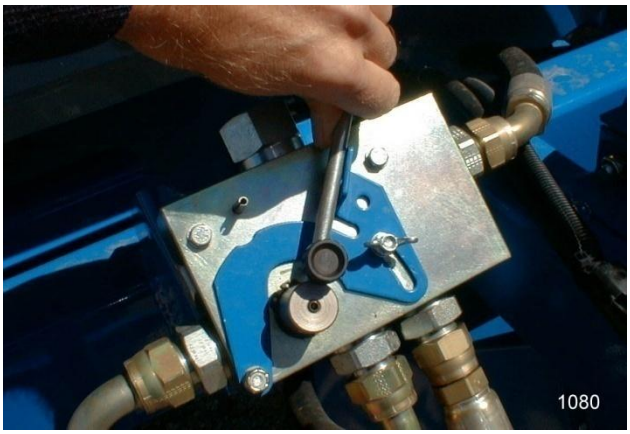

Fig. H3 Flow Control Valve.

Hydraulic Connections and Hose Kit

All quick release couplings required to connect the Air Seeder to the tractor have been supplied with your machine. Also included is a hydraulic hose kit, clamps and fixing hardware to fit your implement for all rear tow models.

Not included in the hydraulic kit however, are any hoses that may be required to run the return oil flow directly back to the tank on the tractor itself. Each tractor will require its own hoses and operators should contact their local authorized dealer for further instructions.

It is important that all return hoses fitted to the tractors hydraulic tank are placed below the reservoir oil level.

Case Drain

It is important to fit the case drain directly to the tank or through a dedicated case drain line that may already exist on the tractor. Case drain pressure **MUST NOT EXCEED** specifications (refer page 13). Seal damage will occur if case drain is restricted in any way.

DO NOT restrict the return flow by using small hydraulic fittings.

Connecting the Seeder Hydraulics to the Tractor

There are 3 hydraulic hoses that must be connected to the tractor to operate your Air Seeder (refer Fig. H4).

1. Return Hose (¾" SAE100R2) with a ¾" safety male (Tema) breakaway at the tractor. Connected direct to tank or through remotes, using the female TEMA fitting.

2. Case Drain Hose (3/8" SAE100R1) with a ½" safety male (Tema) breakaway at the tractor. Connected direct to tank.

3. Pressure Hose (3/4" SAE100R2) with a ½" standard male breakaway at the tractor. This hose is connected directly to the existing tractor's hydraulic circuit.

Fig. H4 Tractor Hydraulic Fittings.

Both return lines must be connected to the tractor using the safety (Tema) fittings supplied. This breakaway coupling has a locking ring that should be engaged when connected to prevent accidental disconnection. (Fig. H5).

NOTE: Severe damage can occur if a return line is accidentally disconnected while the hydraulic motor is operating.

Fig. H5 Locking Ring on pressure hose.

Fitting the Seeder Hoses over the Implement for RT Model Seeders

When fitting the implement's hydraulic hose kit some basic steps should be followed.

1. All hoses should be firmly fixed into position on the implement using the clamps supplied.

2. Keep hoses clear of any sharp edges or other obstructions that may cause wear on the outside of the hose.

3. Do not over bend or force hoses into position. Allow enough length for the hose to move if required.

For further details refer to the drawing supplied with the implement hydraulic kit. This drawing gives detailed information on the fitting of the specific hose kit to your implement.

Connecting the Seeder Hydraulics to the Implement on Rear Tow Seeders

When connecting the air seeder to the rear of the implement you will find that the pressure line on the seeder has a plastic sleeve fitted to the hose end, and has been supplied with its Tema fitting reversed. This will prevent the hoses from being connected incorrectly once the implement hose kit has been fitted.

Fig. H6 Implement Hitch with Tema couplings.

As per the tractor connection, the couplings have a locking ring that must be engaged when connected to prevent accidental disconnection (Fig. H5).

Disconnecting the Hydraulic Hoses

It is advisable to drain a small amount of oil from the hydraulic hoses when disconnecting the seeder from the tractor.

Fig. H7 Draining a small amount of oil.

Oil can be drained by pushing the tip on the male end of the Tema coupling against a clean hard surface.

This will allow a small amount of oil to run out (approximately 1/4 a cup) which will reduce any pressure that may build up in the hose during the non-operational period.

NOTE: The air seeder blower hydraulic motor shaft seal may be damaged if pressure builds up in the case drain hose. Drain a small amount of oil before storing seeder at end of season.

Hydraulic Filter Maintenance

The oil filter fitted to the air seeder is capable of filtering up to 100 l/min. (26.5 US gpm.) at high pressure (Fig. H8).

The filter has a built-in by-pass valve specifically designed to withstand surges that may occur during normal operation i.e. flow and pressure surges experienced during start-up procedure. This by-pass valve prevents dirt from being forced through a clogged element and potentially contaminating the circuit.

The disposable microglass element should be replaced every two to three years under normal operating conditions.

Fig. H8 Hydraulic Oil Filter.

If a badly clogged filter element is not replaced the by-pass valve could operate constantly. This would mean that all or part of the oil flow is no longer being filtered.

The filter manufacturer recommends changing the filter every 500 hours for normal operation. This should be used as a guide only. Always carry a spare filter on hand if extended operation is expected.

Replacing the Filter

1. To change the filter, simply unscrew the bowl using a container to collect the oil.

2. Remove the old filter element and discard in a responsible manner.

3. Clean the magnet, if fitted, on the filter body.

4. Fit the new filter element as per instructions marked on the filter body.

NOTE: Always use genuine parts when repairing and maintaining your equipment. Refer table H9 for filter part no.

Filter Type	***Date of Use***	**Element Part No.**
Parker 24P	Pre May ‘99	817042
Parker 18P	Post May ’99	210423

Table H9

Introduction

The Air Seeder uses airflow to convey the material being sown, known as pneumatic conveyance. To produce enough airflow to convey the large amounts of seed and fertilizer, Gason's have developed a high performance blower of aluminium and steel construction.

Fig. B1 – Blower Assembly

The blower assembly is made up of a housing and impeller. The impeller operates at high speed being driven by a robust and efficient hydraulic motor. The impeller is directly mounted to the motor and is therefore free of any external bearings or coupling, making the system maintenance free.

It is important to remember that this is a rugged but high performance centrifugal fan operating at high speeds. Care must be taken when working on either the motor or blower assembly.

IMPORTANT: Never work on or near the blower intake without the protective intake cover fitted while the impeller is rotating. Serious injury may occur.

Performance

Three main factors determine the amount of material that must be conveyed pneumatically through the system:

- Planting width
- Ground speed
- Total application rate

Total Application Rate (Conventional Seeding)

Total application rate relates to the maximum amount of seed and fertilizer that you wish to convey through the system. If you are seeding using conventional practices the total application rate would be the fertilizer rate plus the seed rate (refer example 1).

Example 1

A cereal crop of wheat with an application rate 55 kg/ha along with fertilizer at a rate of 62 kg/ha would equal a total application rate of:

55 + 62 = 117 kg/ha

NOTE: To convert lb/acre to kg/hectare refer to page 58.

Application Rate (Deep Banding and Triple Shooting)

For working out the appropriate application rate for deep banding and triple shooting it is important to remember that the limiting factor for how much the system will convey is the heaviest application rate required using the least number of primary tubes. In most cases this will be the fertilizer that may be placed down 2 or 3 primary tubes.

Example 2

A deep banding system using a 4 outlet meterbox has been set up to plant 65kg/ha of barley down the 2 outside primary tubes and 95kg/ha of DAP fertilizer down the 2 middle primary tubes.

The most important figure to look at here is the heaviest amount of material being conveyed down the least number of primary tubes. In this case:

95kg/ha in 2 primary hoses.

Maximum allowable Application Rates

By referring to the charts on pages 122 to 125 we can determine the maximum amount of material that can be reliably conveyed.

Four charts have been produced to show the maximum rates of conveyance for 2, 3, 4 and 6 primary hose systems. It is possible to convey more material with 4 primary hoses than 2. This occurs because the 4 primary hose system simply has more available space in the hose to convey more material.

The charts also show that as the planting width is reduced the allowable application rate will increase. This is also true for the ground speed. As the speed reduces the allowable application rate will increase. Some examples follow.

Example 3

A conventional seeding system using a 4 outlet meterbox is required to plant 65kg/ha of wheat and 110kg/ha of fertilizer down all 4 primary tubes. The implement width is 14 metres and the proposed ground speed for seeding will be 11 km/h.

The total application rate in this case is:

65 + 110kg/ha = 175kg/ha

By going to the graph on page 124 headed ‘maximum application rate 4 primary hoses’ we can see that the maximum amount of material the system can handle at 11km/h and 14 metres width is approximately 280kg/ha. Therefore, there should be no problems in conveying the total application rate of 175kg/ha.

A moderate fan speed would appear to be all that was needed to suit the medium application rate of 175kg/ha. Choose a fan speed of 4100rpm (refer page 120).

Example 4

A deep banding system using a 4 outlet meterbox has been set up to plant 65kg/ha of barley down the 2 outside primary tubes and 95kg/ha of DAP fertilizer down the 2 middle primary tubes. The implement width is 12 metres and the proposed ground speed for seeding will be 10km/h.

In this case we use the fertilizer application rate to determine the conveyance capacity. By going to the graph on page 122 headed ‘maximum application rate 2 primary hoses’ we can see that the maximum amount of material the system can handle is 180kg/ha (worked example below the graph). Therefore, there should be no problems in conveying the 95kg/ha of fertilizer down the 2 middle tubes. Fan speed would again only require a middle range speed of 4100rpm.

Flow Control Valve

The Gason Air Seeder is fitted with a flow control valve located next to the blower unit. By altering the setting it is possible to change the speed of the blower (Fig. B2). After altering the setting lock the lever into position with the screw fitted to the handle.

For **Closed Centre Hydraulic Systems** refer to page 114.

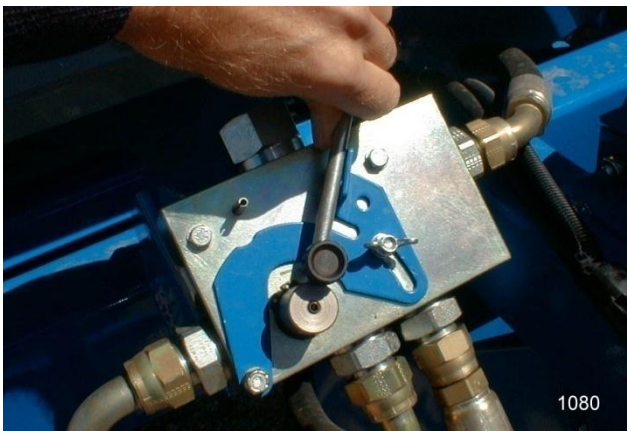

Fig. B2 Flow Control Valve.

The maximum allowable speed for the blower is 4500 rpm. A restrictor plate has been fitted to the flow control valve to help prevent over running the blower. The alarm on the monitor in the tractor has also been set to activate if the speed runs over the recommended maximum of 4500 rpm.

Constant over running of the blower will reduce the life of the hydraulic motor and possibly cause damage to the blower impeller.

Blower Speed

The speed setting for the blower will depend on the amount of material you wish to convey. Blower speed is not critical to the accuracy of the metering because of the inbuilt pressure equalisation system that exists on the Gason Air Seeder.

A more important factor when setting the blower speed is to supply enough air to reliably convey the product but not so much that you produce seed bounce or product damage at the sowing boot.

One method of checking fan speed is to remove one of the tertiary hoses from a sowing boot and hold it at chest height with the end of the hose pointing up. With the fan at operating speed have someone turn the calibration handle over to simulate ground speed, or activate the prime function if VRT equipped, to send product through the system. Material should exit the hose and be projected approximately 300 to 500mm vertically beyond the hose end.

NOTE: All reference to blower speed refers to operational speed while seeding. This speed may vary from the blower speed set when no material is being conveyed. It is important to remember when setting the blower speed to check the speed again when actually seeding. This can be done through the seeder's monitor in the cab of the tractor.

At low application rates the difference between a stationary fan speed setting and when actually seeding will vary little if at all. However on some tractors it may be impossible to obtain the high blower speeds (4500rpm) required, when the application rates are high, until the product is being conveyed.

To obtain maximum fan speed, simply set the flow control valve to maximum and begin seeding. Once material is being conveyed check fan speed on the monitor.

DO NOT EXCEED 4500 RPM BLOWER SPEED. EXCESSIVE BLOWER SPEED WILL REDUCE THE LIFE OF THE HYDRAULIC MOTOR AND IMPELLER.

If when seeding, you find that the blower is running too fast, stop the machine and reduce the setting on your flow control valve at the seeder (refer Fig. B2), or from the tractor, if equipped with closed centre hydraulics.

Determining the Appropriate Blower Speed

Blower speeds can be grouped into 4 different levels for material application.

A low total application rate will only require a relatively low blower speed. As the application rate increases, so too will need for the blower speed to increase. Refer to Table B3 for recommended speeds.

Very low application rate	3000 rpm
Low application rate	3800 rpm
Medium application rate	4100 rpm
High application rate	4500 rpm

Table B3 Blower Speed

To determine the appropriate speed for the blower we must first determine the total material application rate to be conveyed.

Comparing this figure against the appropriate maximum application rate we can estimate the blower speed.

Example 5

A 3 primary hose system on a 12 metre wide planting width at 10 km/h will allow a maximum application rate of 270 kg/ha (refer page 123). If we compare this with our desired total application rate of 117 kg/ha in the earlier example (refer Example 1 on page 118), we can see that we are well short of the system's maximum capacity. This rate would only require a low fan speed of 3800 rpm.

Example 6

If however the same machine as in the previous example was used for planting peas at 140 kg/ha and fertiliser at 120 kg/ha the appropriate blower speed will be different. The new total application rate will be 140 + 120 = 260 kg/ha. This would be a high application rate when comparing it with the known maximum allowable of 270 kg/ha, and would require a high blower speed to convey the material i.e. 4500 rpm.

NOTE: While every effort has been made to determine accurate maximum conveyance levels, A. F. Gason Pty. Ltd. will not be held responsible for conveyance short falls in the system. This is because there are so many variables in determining the conveyance capacity of the system.

Damp or extremely dusty fertilser can cause blockages in the distribution system. Always ensure that the product is dry and palletised before operating the air seeder.

Fig. B4 Blower Assembly fitted to 1880FT Air Seeder.

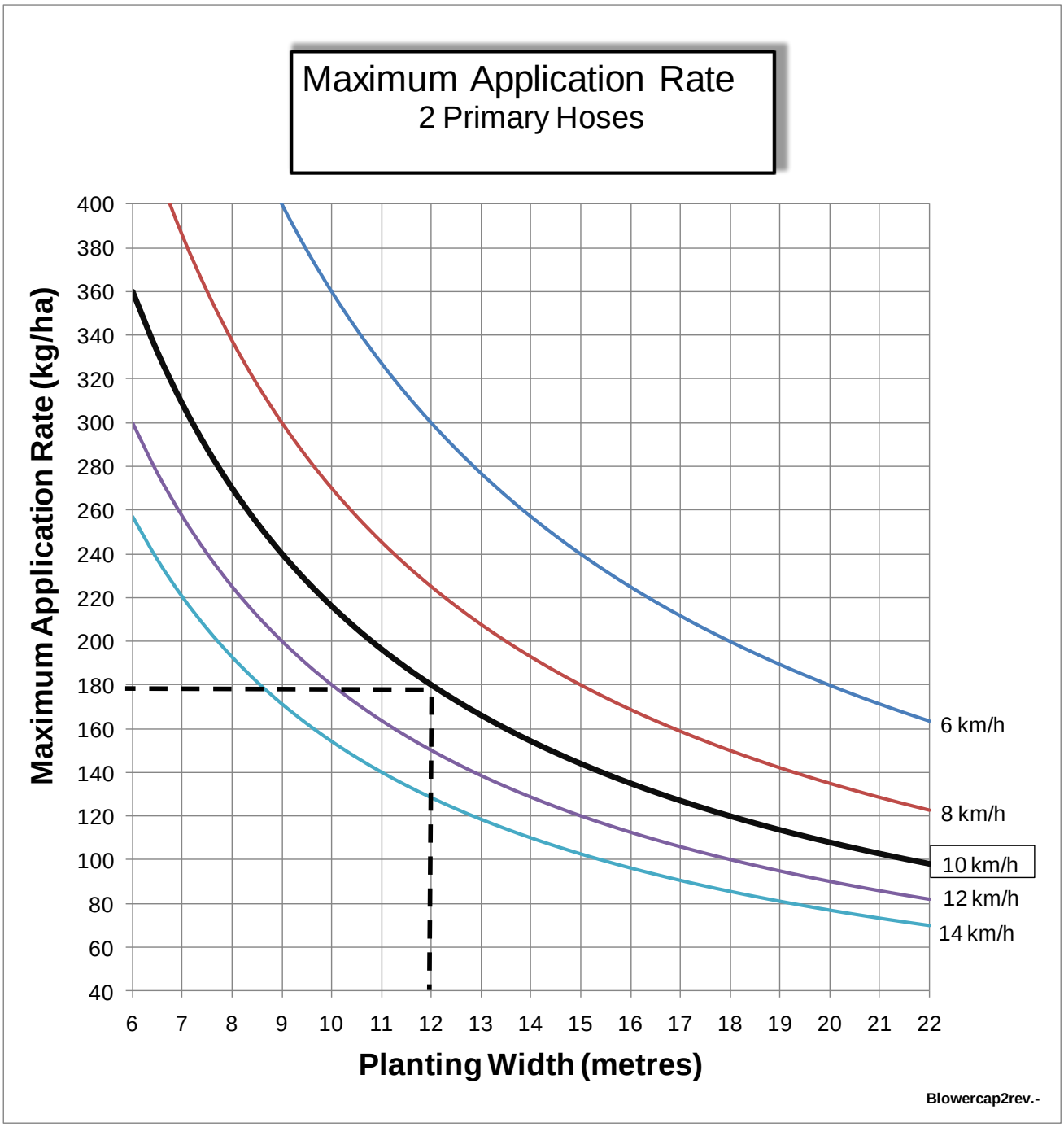

Table B5

Worked example:

Maximum sowing rate for a 2 outlet system on a 12 metre wide planting width at 10 km/h ground speed.

From graph maximum total application rate = 180 kg/h

NOTE: The above graph should be used as a guide only. Other factors will affect the conveying performance of the air seeder.

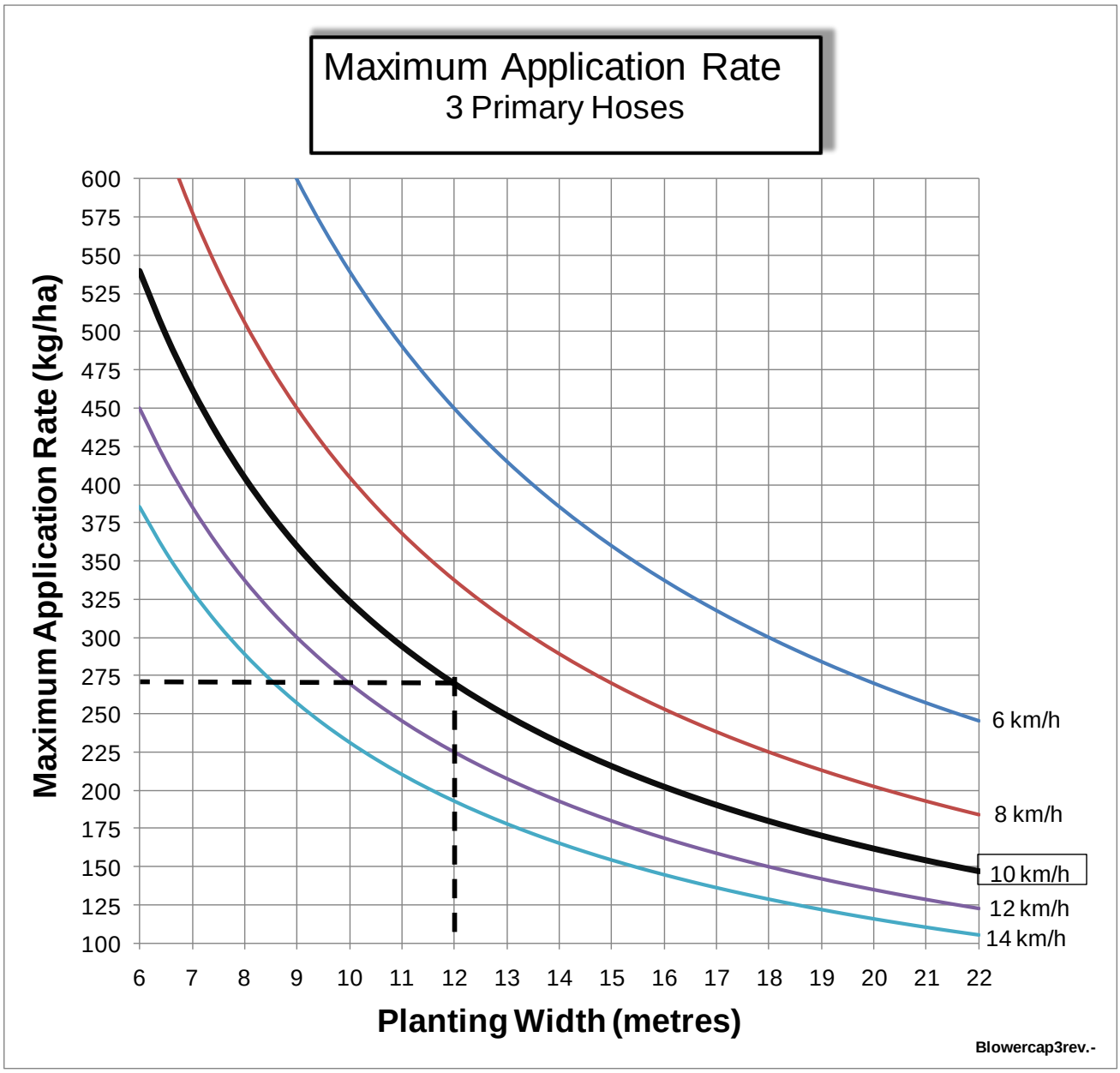

Table B6

Worked example:

Maximum sowing rate for a 3 outlet system on a 12 metre wide planting width at 10 km/h ground speed.

From graph maximum total application rate = 270 kg/ha

NOTE: The above graph should be used as a guide only. Other factors will affect the conveying performance of the air seeder.

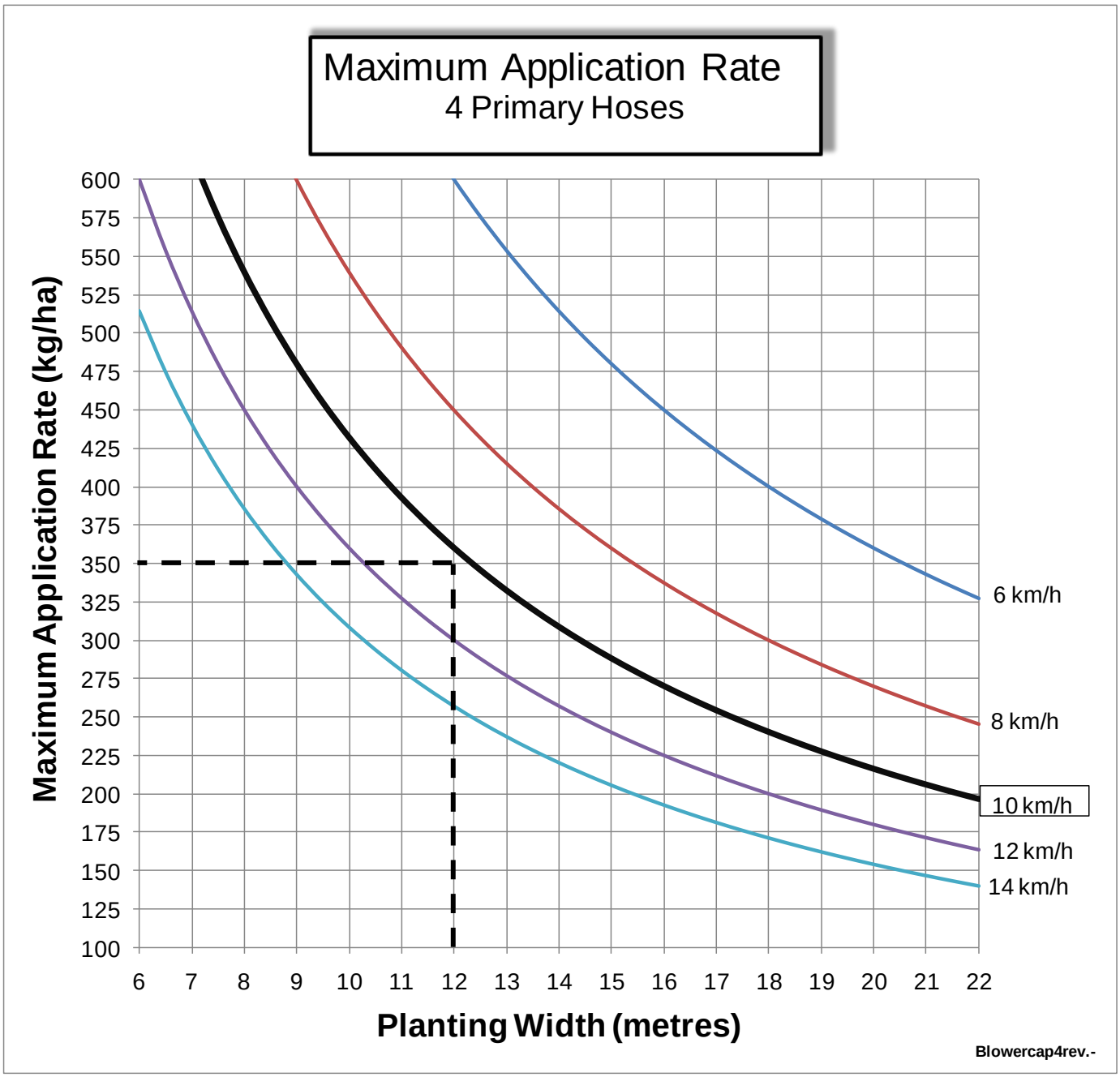

Table B7

Worked example:

Maximum sowing rate for a 4 outlet system on a 12 metre wide planting width at 10 km/h ground speed.

From graph maximum total application rate = 350 kg/ha

NOTE: The above graph should be used as a guide only. Other factors will affect the conveying performance of the air seeder.

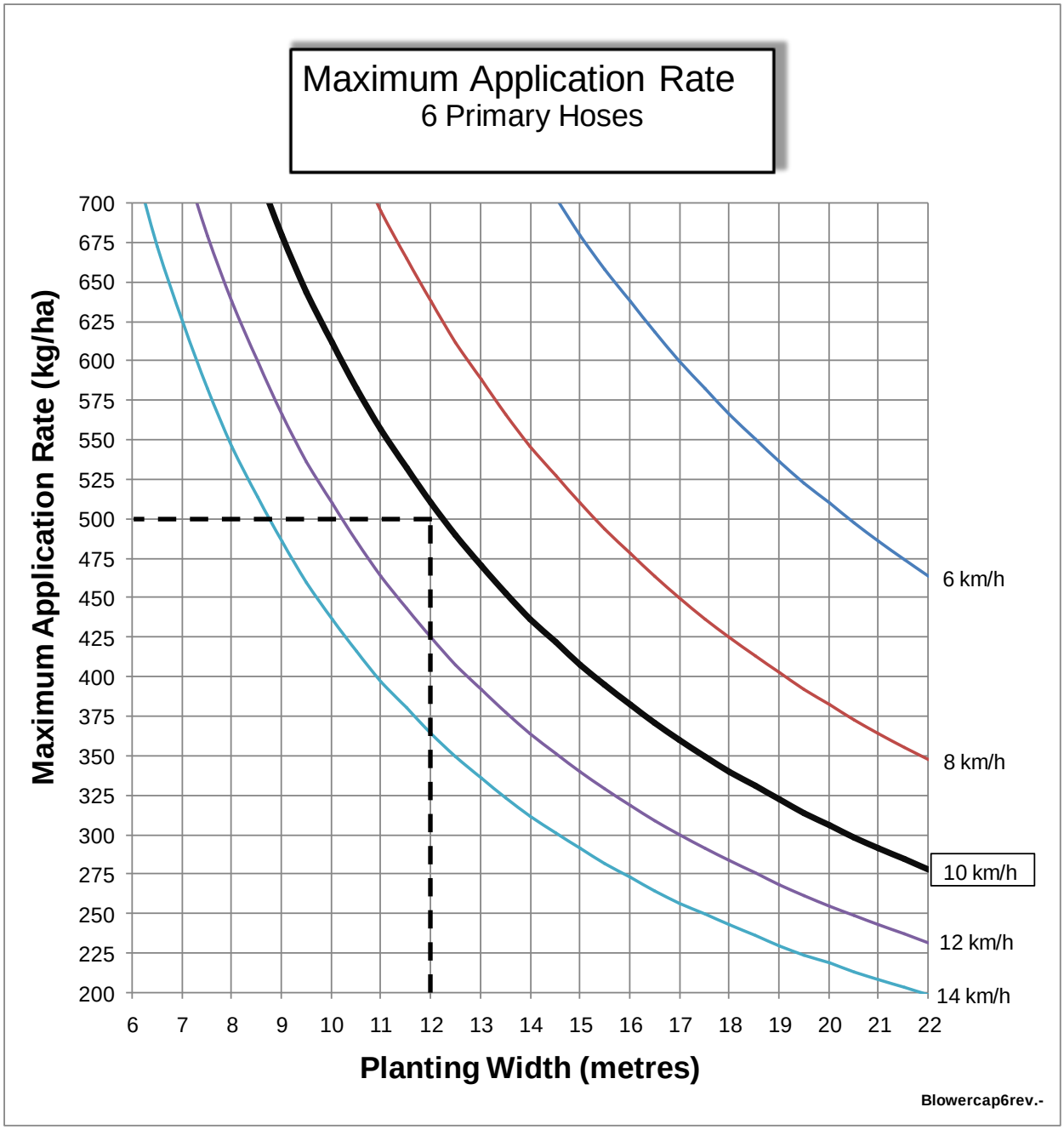

Table B8

Worked example:

Maximum sowing rate for a 6 outlet system on a 12 metre wide planting width at 10 km/h ground speed.

From graph maximum total application rate = 500 kg/ha

NOTE: The above graph should be used as a guide only. Other factors will affect the conveying performance of the air seeder.

Introduction

Regular maintenance will ensure trouble free operation for the life of the seeder. It is recommended that when replacing parts you use genuine components and fasteners of the same grade and quality as the ones used on the original machine.

DO NOT COMPROMISE SAFETY WITH FAULTY COMPONENTS.

Daily Checklist

1. Chain drives

   - Check chain tension (Fig. GM1).

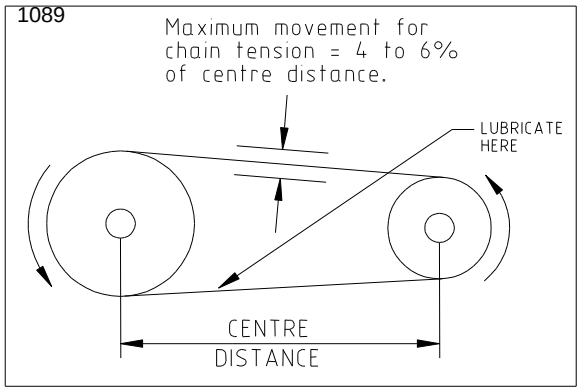

Fig. GM1 Chain Tension

   - Check for worn sprockets.
   - Check sprocket alignment.

2. Distribution hoses

   - Check for wear on external components.
   - Check hoses do not sag or bend sharply.
   - Check all hoses are fitted correctly.
   - Inspect secondary manifolds for product build-up.

3. Wheelnuts

   - Check tension of all wheelnuts when first working the air seeder after assembly or if a wheel has been fitted. This need only be done for the first couple of days of operating.

4. Hydraulic system

   - Check all breakaway fittings have their safety ring engaged (refer page 116).

Weekly Checklist

1. Drive system

   - Lubricate drive chains if necessary.
   - Grease all drive shaft bearings.
   - Check sprockets are tight.
   - Check clutch bolt is tight.

2. Meterbox bearings

   - Grease bearings (3 places per meterbox).

NOTE: It is recommended that the external meterbox bearings are overgreased rather than undergreased. Excess grease from the bearings will help lubricate the mechanical seal that prevents product from reaching the bearing. If metering fine dusty material through the meterbox it is recommended to grease more frequently.

3. Distribution system

   - Check all hoses for internal wear. Rotate hoses if necessary.
   - Check gasket at primary hose connection mounted on the hitch assembly.
   - Check primary hoses for external wear on the drawbar and seeder trailer.

4. Hydraulic system

   - Inspect all hydraulic hoses for external wear.
   - Inspect all hydraulic fittings for possible leaks.

5. Variator (ground drive)

   - Check oil seals for leakage.

6. Auger (if fitted).

Check locking mechanism is correctly adjusted and that the auger barrel cannot move in transport.

During the Season

1. Metershaft Assembly

   - Grease metershaft nose assembly bearing.

You will need to remove the metershaft assembly from the meterbox to gain access to this bearing. This bearing should be greased at least once during the season as well as at the beginning and end of season.

Refer to the meterbox section for more information.

Fig. GM2- 2150FT fitted with rear platform option.

End of Season Checklist

At the end of the season ensure that the seeder is cleaned of all product and mud. Some fertilisers are very corrosive and can reduce the life of the seeder if left in contact with steel surfaces.

Refer to the Storage and Cleaning section for a full description.

1. General Checklist.

- Inspect tyres for wear or damage and check tyre pressures.
- Inspect all gaskets on hatches for wear and damage.
- Inspect bins and seals for damage (bins must be air tight).
- Check that all bearings on the meterbox and drive system are serviceable and greased.
- Check the nose bearing on the end of the metershaft is serviceable and greased.
- Check sprockets and chains for wear and lubricate.
- Replace oil filter if it has been used for more than two years.
- Check hydraulic hoses for external damage.
- Release oil pressure in hydraulic hoses when disconnecting breakaway fittings.

Pre-Season Checklist

1. Variators and Drive System

- Inspect both input and output shafts on variators for rust.
- Check variator oil seals for leaks.
- Replace oil in variator if contamination may have occurred due to condensation or faulty seals. (Refer page 61).
- Lubricate all chains.
- Check chains for tension and alignment.

2. General

- Check meterbox is free of fertilizer and seed.
- Check meterwheels are clean.
- Check metershafts turn freely.
- Grease all meterbox bearings.
- Check the nose bearing on the end of the metershaft is serviceable.
- Check calibration system turns freely.
- Replace the hydraulic oil filter if necessary.
- Check meterbox hatch seals.
- Check clutch bolt is tight (g/drive).
- Grease all drive shaft bearings.
- Check tyre pressures (refer to the specification pages for the specific machine and tyre size pages 8-14).
- Check calibration scale accuracy (refer checking procedure below.
- Charge internal battery on scales.

Calibration Scale Accuracy Checking Procedure:

The scales have been provided with a non-certified 2kg test weight that should be accurate enough for most seeding operations. Use the 2kg sample as a base weight and add extra weight to check the full range eg. Check 2 kg weight reads within 5 grams. Remove weight and add 2 kg of product. Now place the weight back on the scales to ensure the load indicated increases by 2kg plus or minus 5 grams. Continue process until the top limit of the scales is reached.

Fig. GM3- Scale Test Weight being used.

Problem	***Possible Solution***
Transporting/Towing	
1. Transporting/Towing Issues related to unstable operation at maximum towing speeds.	➢ Check tyre pressures are as per the recommended operating pressures stated in the Specification section. ➢ Refer to the Transporting section for tips to remember when towing. ➢ Castor wheel front ends may benefit with a slightly reduced tyre pressures (no more than less 20%) from recommended. ➢ Check wheel alignment on CTS models if front end is unstable at towing speeds.
Hydraulics	
1. Difficulty in obtaining fan speed.	➢ Check flow control valve is correctly adjusted and that the locking screw is tight. (Refer page 119). ➢ Check that the flow diverter valve is set correctly if a loading auger has been fitted. (Refer page 135). ➢ Check tractor hydraulics have been set correctly. (Refer page 114). ➢ Check tractor hydraulics for oil flow and pressure. This will require special equipment and you should consult your dealer or local hydraulics expert. **NOTE:** It may not be possible to obtain a high blower speed without material being conveyed (refer page 120 for explanation).
2. Fan Speed Fluctuating	➢ Refer to the Hydraulics Section (page 114 re close centre hydraulics).
3. Hydraulic system over heating	➢ Check fan speed is not above the recommended 4500 rpm max. ➢ Reduce oil flow from tractor to seeder as per model specifications. Refer page 114 for details on seeder requirements. ➢ Check that the flow diverter valve is set correctly if a loading auger has been fitted. (Refer page 135). ➢ Replace the oil filter if it has been used for more than two years. ➢ Check tractor hydraulic cooling system. **NOTE:** Do not exceed a return line oil temperature of 90°C from seeders hydraulic motor.

Problem	***Possible Solution***
4. Hydraulic system not operating	➢ Check that the correct hoses are attached at the tractor and implement and that the breakaways fitted are fully engaged. ➢ Check that the flow control valve on the seeder is not set at zero. ➢ Check that the flow diverter valve is set correctly if a loading auger has been fitted. (Refer page 135)
Metering System (Ground Drive)	*(Refer page 93 for VRT Metering system)*
1. Electric clutch not operating	➢ Check the power supply on the tractor. ➢ Check that the fuse inside the clutch switch box has not blown (pre 2001 models only). ➢ Check that the harness over the implement is attached and not damaged in some way. ➢ Check that the plug at the clutch, on the seeder, is connected. ➢ Check that the clutch bolt is tight. ➢ Remove clutch and clean dirt from the mating faces. ➢ Check that the sprocket drive system is operating correctly.
2. Clutch not disengaging	➢ Disassemble the clutch and clean unit. ➢ Check function of clutch switch.
3. Difficulty obtaining Low Rates	➢ Fit meterwheel cover plates (page 110). ➢ Check that the sprocket ratio is set as per standard ratio layout (refer page 63). ➢ Check main drive sprocket ratios have not been altered (refer Spare Parts Manual). ➢ Check your calibration procedure. ➢ It may be necessary in some circumstances to restrict the flow of air along the unused primary tubes at both the front and rear meterboxes. (Refer page 111, 'Blocking Air Flow'). ➢ Check that the variator is being adjusted correctly when operated through the cable. The variator should not turn when the adjustment is set at zero. Check grub screws that retain the arm onto the variator are tight.

Problem	***Possible Solution***
4. Difficulty obtaining High Rates	➢ Check the variator setting guide (pages 41 to 55) to obtain more information on what can be expected from the metering system. ➢ Check the meterwheels are not damaged in some way and have been fitted to the metershaft in the correct orientation. ➢ Check that the meterwheel cover plates have been removed (refer page 110). ➢ Check that the main drive sprocket ratios have not been altered (refer 'Parts Section'). ➢ Material bridging may be occurring if sowing difficult product. Refer to page 112 for oats. If product is fertilizer, check that it is not wet. ➢ Check that there is no blockage inside the bin at the meterbox. ➢ Check that the variator is being adjusted correctly when operated through the cable. The variator should not turn when adjustment is set at zero. Check grub screws that retain the arm onto the variator are tight. ➢ Check the variator for damage (refer page 62). ➢ Change the sprocket ratio over to the high ratio setting on the particular meterbox if required (refer page 63). Increase ratio only if recommended.
5. Seed Dribble occurring	➢ Block off unused primary tubes at the meterboxes. (Refer page 111, 'Blocking Air Flow' for further information). ➢ Check that the meterwheel cover plate is fitted. Refer page 112 in the metering oats section. ➢ Check for air leaks on the meterbox hatches and bin lids. ➢ Check for even airflow coming from the plenum chamber attached to the seeders blower. ➢ Check all primary hoses for a severe blockage that would cause an uneven pressure or airflow in the system.
6. Metershaft not Turning when Drive System is engaged.	➢ Check drive pin and drive shaft on the drive end of the SR metershaft assembly. ➢ Check metershaft is fully engaged.

Distribution System

1. Blockage occurring in hose system

- Check blower speed is set correctly (do not exceed 4500 rpm).
- Check that the sowing boots are clear of mud and flow is not restricted.
- Check that the material being sown is not wet or binding.
- If blockages are occurring after the machine has been sitting idle, check that water is not sitting in the base of the meterbox. Always warm the system up (run blower for 10 to 15 minutes) before conveying material.
- Hoses must not bend sharply or sag.
- Check the output of the metering system is as per your settings (recalibrate).
- Check blower capacity for maximum conveyance (refer to the appropriate chart on page 122 to 125).
- Inspect all other areas of the distribution system for air leaks.
- Check tractor ground speed has not increased to a point above the conveyance capacity of the system (refer pages 122 to 125).

2. Sowing boots blocking

- Conditions unsuitable for sowing.
- Do not lower points into ground until the implement is moving.

3. *Uneven distribution*

- Check the material is being metered evenly across the meterbox. Use the calibration collection tray and turn calibration handle.
- Check for a blockage in the distribution tubes and hoses.
- Check fan speed is not excessive.
- Ensure the primary splitters are sitting level on the implement.
- Ensure the secondary head support towers are vertical and not leaning to one side.
- Check the secondary heads for foreign matter i.e. straw.
- Check that the bin lids are locked and that meterbox hatches are not leaking.
- If sowing difficult product, check that material is not bridging across the bottom of the meterbox. If sowing oats, refer to page 112.

Rear Seeder Hitch for RT models

The rear seeder hitch kit has been designed to fit the rear of the trailer frame to give a strong attachment point for operators who wish to tow a light prickle chain or light set of harrows (not disc harrows).

The kit can be mounted in minutes and all hardware is supplied. The hitch point uses a 28.6mm (1-1/8") draw bar pin as standard. Refer to the parts manual for further details.

Pasture Planter

The Gason Pasture Planter has been designed to operate in conjunction with the range of Gason Air Seeders. The pasture planter is generally mounted directly to the Seeder's bin. It utilizes the Seeder's drive system to operate the metering assembly and the blower to convey the seed.

The Gason metering system is a positive and accurate method of placing small seeds into the air stream. The system is capable of sowing a wide variety of small seeds, with minimal adjustment.

Each model consists of a fully sealed bin, metering system driven by the standard Air Seeder drive system, hosing and tap to control air supply from blower and a platform with handrail.

The Gason Pasture Planter bin capacity:
380 litres / 10.5 bushels

Fig. OA1 Pasture Planter bin.

Loading and Unloading Auger

A loading and unloading auger can be fitted to most of the Air Seeder range. The auger operates from the same hydraulic system as the fan using a diverter value.

For more information refer to the Auger Section in this manual.

Urea Spreading Kit

A urea spreader kit is available to operators wishing to triple shoot, or to maintain separate urea placement from their seed and starter fertilizer.

The kit bolts onto the front of the implement and distributes the urea through a standard secondary head arrangement to spreader plates. The spreader plates are supported in front of the implement on its own structure or can be mounted directly to the tool bar. Urea is spread evenly on the ground in front of the implement.

Large Seeds / Broad Beans Metershaft Assembly

A metershaft assembly can be fitted to the SR meterbox that will allow it to meter large seeds. Contact your Gason dealer for further information.

Air Intake Warmer Kit

Gason's Air Intake Warmer Kit is designed to heat the air inside the air seeder distribution system to help reduce the effects of moisture in the atmosphere.

The hydraulic warmer utilizes a specially designed bypass valve to protect the system from damage, and to prevent tractor oil loss. The kit fits directly to the blower intake and will suit most Gason seeders. Contact your Gason dealer for further information.

Introduction

The auger (optional feature) can be used for loading and unloading the air seeder bins. The arm mechanism that supports the auger will allow the augers hopper to be positioned under the bins for unloading or beside the machine for filling.

Fig. AO1 2120RT with auger in filling position.

To operate the auger you will need to manoeuvre the barrel away from the machine. Release the front auger barrel clamp on the side of the front bin (refer Fig. AO2).

Fig. AO2 Front auger barrel clamp.

Withdraw the pin that retains the primary arm to the trailer and pull the arm outwards a small distance to prevent the pin from re-engaging (refer Fig. AO3).

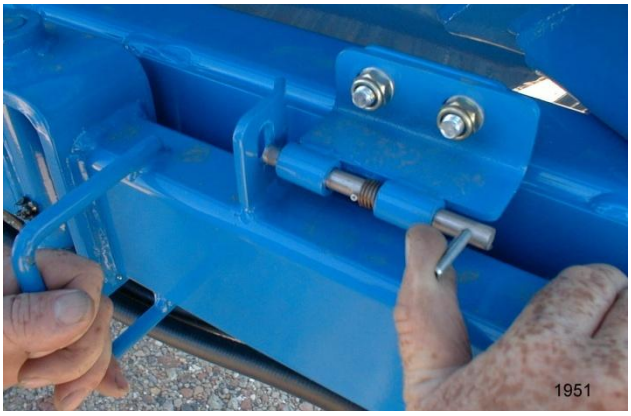

Fig. AO3 Pin retainer on auger arm.

Release the rear auger barrel clamp at the rear of the seeder to free the auger. Be careful that the auger does not tip forward if the barrel is out of balance. Move the auger away from the machine using the handle near the hopper to help in controlling its position. You may need to rotate the auger hopper if it has been tilted to its storage position.

You are now free to manoeuvre the auger to either fill or empty the bins. If you wish to empty your bins it is advisable to remove the meterbox hatches before positioning the hopper underneath the meterbox.

Fig. AO5 Manoeuvring the auger.

Once the hopper is in position you can divert the oil flow away from the fan. Simply withdraw the plunger-style valve to transfer the flow. (Refer Fig. AO6).

Fig. AO6 Diverter Valve.

To operate the auger flight use the directional control valve (DCV) mounted on the auger barrel. (Refer Fig. AO7). This valve has three positions. Middle position is neutral. Pushing the handle towards the top of the auger will run the unit forward and to reverse, simply move the handle in the opposite direction. A second handle is fitted at the top of the auger to give dual control.

Fig. AO7 Directional Control Valve.

Do not leave the auger running for extended periods unless actually conveying product. This will extend the life of the auger. Thoroughly clean the hopper and barrel after conveying the product to prevent contamination.

General Safety Conditions

Ensure that the auger does not move excessively in transport when locked into position. Adjust the front and rear locking mechanisms to tighten the barrel.

DO NOT place hands or feet near hopper guard while auger is operating. Severe injury may occur.

DO NOT operate auger without hopper guard or motor coupling guard in place.

DO NOT operate auger if hydraulic system is damaged in anyway. Inspect hoses for damage on a regular basis and at the beginning or end of each season.

DO carry out daily safety checks and operate the auger in a **SAFETY CONSCIOUS** manner.

BEWARE of overhead powerlines when operating the auger.

Auger Speed and Oil Flow

It may be necessary to reduce the oil flow from the tractor when operating the auger to prevent over speeding of auger flighting. The table below (table AO8) shows the maximum speeds appropriate for the different auger diameters.

Auger Size	Auger Speed (rpm)
7”	500
8”	450
9”	400

Table AO8 Maximum rpm for Augers

Over speeding the auger can damage the barrel and flighting. A **speed control valve** is available as an option. Contact your local Gason Dealer for further information.

To maximize the life of the seeder it is suggested that basic cleaning and protection of some areas of the seeder is performed after each season.

1. Empty all bins of fertilizer and seed.

2. Release oil pressure in hydraulic hoses when disconnecting breakaway fittings (refer page 116).

3. Wash the inside of the bin and meterbox with warm soapy water to clean any fertilizer or toxic residue that may have been left. Flush with water and thoroughly dry before sealing the compartment area. **Note: Take care not to spray water directly at the bearings and shaft seal**

4. Wash the outside of the seeder to reduce the possibility of rust and to extend the life of the paint.

5. Grease and generally apply lubrication to all moving parts where practical. Lubricate chains with a suitable chain lubricant. Place grease or some form of rust inhibitor on the variator shafts.

6. Plug primary distribution hoses on seeder and fit the supplied cover plates to the implement to prevent infestation of pests.

7. Inflate tyres to maximum recommended pressure before storing.

8. If the seeder is to be stored outside, place covers over the tyres, hoses and blower intake to reduce the effects of weathering.

9. Loosen the bin lid and meterbox hatch to allow the seals and gaskets to recover.

10. Chock the wheels to prevent seeder moving.

Preparing the Seeder for Operation

To prepare the seeder for operation after storage refer to the Maintenance Sections – 'Pre-Season Checklist' on page 128.

Fig. SC1 1880RT air seeder with CT (controlled traffic) option.