VHD Delta Wing

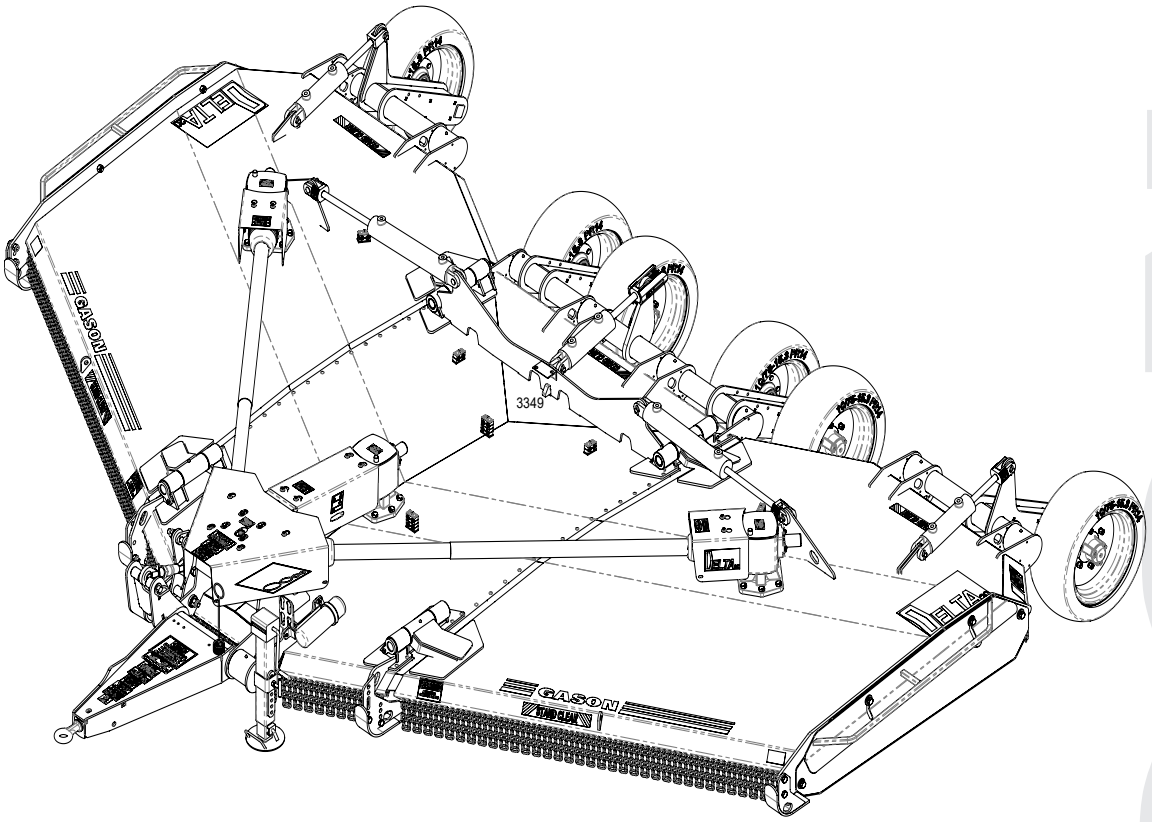

The VHD Delta Wing Series

INFORMATION & PARTS MANUAL

Includes Side Throw & Rear Throw Models.

Covering the

D15 & D20 Models

GPN: 229011 Revision D

11/2023

COPYRIGHT

Neither this manual or part thereof may be reproduced or published without the permission of AF Gason Pty Ltd

GASON

Contents

Ordering Parts 3

Standard Bolt Head Markings And Torque Specifications 4

Machine Specifications 5

Machine Information & Troubleshooting 6

Assembly Instructions 7

Grease Point Locations 8

Parts Diagrams 9

General Assembly 10-11
Pull 12-13
Decals 14-15
Single Blade Set-up 16
Dual Blade Add On (Option) 17
Blade Installation - Rear Throw 18
Blade Installation - Mulch Throw 19
Axle 20
Wing PTO Shafts 21
Input PTO Shaft (05/2021 - Current) 22
Input PTO Shaft (Pre- 05/2021) 23
Transfer PTO Shaft (D15) 24
Transfer PTO Shaft (D20) 25
Gearbox - Cutterhead 26
Gearbox - Power Divider 27
Driveline - Rear Throw 28-29
Driveline - Mulch Throw 30-31
Driveline Guards 32
Guards - Rear Throw 33
Guards - Mulch Throw 34-35
Hydraulics - Wing Lift 36
Hydraulics - Height Control 37
Oversize Sign & Tail Lights Kit (Option) 38

Ordering Parts

The following information must be supplied to your local dealer to facilitate fast and accurate processing of a replacement parts order:-

- Gason Part Number (GPN) and description (as given in this manual)
- Quantity Required
- Machine Model & Serial Number

For your convenience record the following information below.

Dealer Name: _____

Dealer Address:_____

_____

Dealer Phone Number:_____

Machine Model No:_____

Date of Purchase:_____

Serial Number:_____

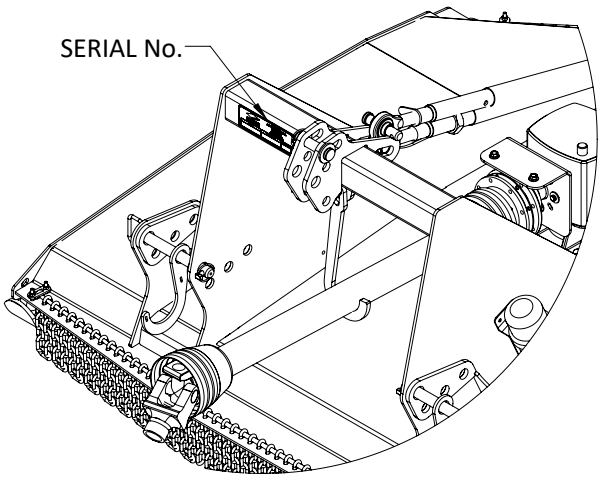

Serial No. Tag At Right Front Of Machine

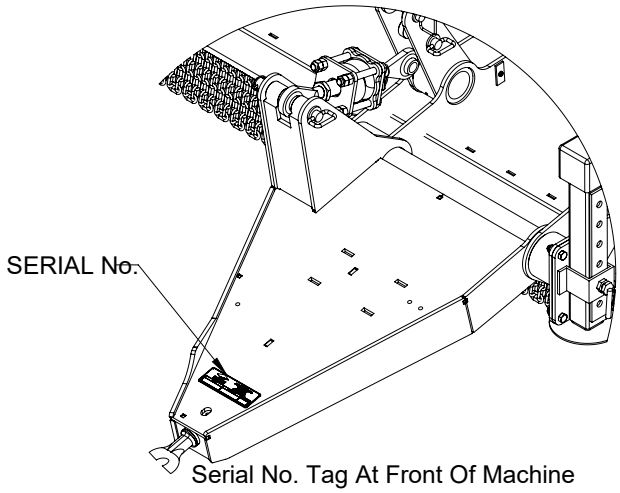

Serial No. Tag At Front Of Machine

Subject to any applicable Federal, State or Territory laws or ordinances, which may apply from time to time, AF Gason Pty Ltd reserves the right to make changes in design and specifications without notice or obligation and to change or discontinue models at any time without incurring any liability to any Purchaser thereof.

Left and right hand: All references in this manual are determined by facing the direction of travel.

For warranty provisions please consult your Installation and Warranty Registration document.

While every effort has been made to ensure the accuracy of the information in this manual,
AF Gason Pty Ltd reserves the right to delete, change or add information without notice.

Standard Bolt Head Markings And Torque Specifications

As part of our service to the end consumer Gason make every effort to ensure all bolts and nuts are torqued using specific procedures during the assembly process.

Throughout this parts manual the following symbols may be seen which indicate important settings crictical to the continued safe operation of your mower/slasher.

: Critical Torque Setting (N m)

: Always Replace after disassembly

Where a Torque is not specified on a nut or bolt it should be assumed that it is torqued according to the following tables.

Size	Thread Pitch	Recommended Assembly Torque					
		lbf.ft	Nm	lbf.ft	Nm	lbf.ft	Nm
S.A.E Grade Number		5		8		Wheel Stud	
Head Markings (Manufacturers marks may vary)							
7/16	UNF	43	59	60	82	-	-
7/16	UNC	39	53	54	74	-	-
1/2	UNF	67	91	94	128	-	-
1/2	UNC	59	81	83	113	-	-
5/8	UNF	135	184	186	253	-	-
5/8	UNC	117	159	165	224	-	-
3/4	UNF	235	319	325	441	-	-
3/4	UNC	210	285	290	394	-	-
7/8	UNF	370	502	520	706	-	-
7/8	UNC	335	455	470	638	-	-
1	UNF	550	746	775	1052	-	-
1	UNC	505	685	710	963	-	-

Metric Grade Number		8.8		10.9		Wheel Stud	
Head Markings (Manufacturers marks may vary)							
M10	1.5	29	40	41	56	-	-
M12	1.75	51	70	73	100	-	-
M16	-	-	-	-	-	170	231
M16	2.0	126	171	180	245	-	-
M18	1.5	-	-	-	-	254	345
M20	1.5	-	-	-	-	376	510
M20	2.5	247	335	351	477	-	-
M22	1.5	-	-	-	-	475	645
M24	-	-	-	-	-	500	679
M24	3.0	425	577	608	825	-	-

NOTE

The above figures are based on zinc plated, lightly oiled hardware.

Recommended assembly torques for alternative finish or application, may be obtained by multiplying the torque figures in the table by:

0.78 – for degreased zinc plated bolts.

1.10 – for black oxide finished bolts.

Machine Specifications

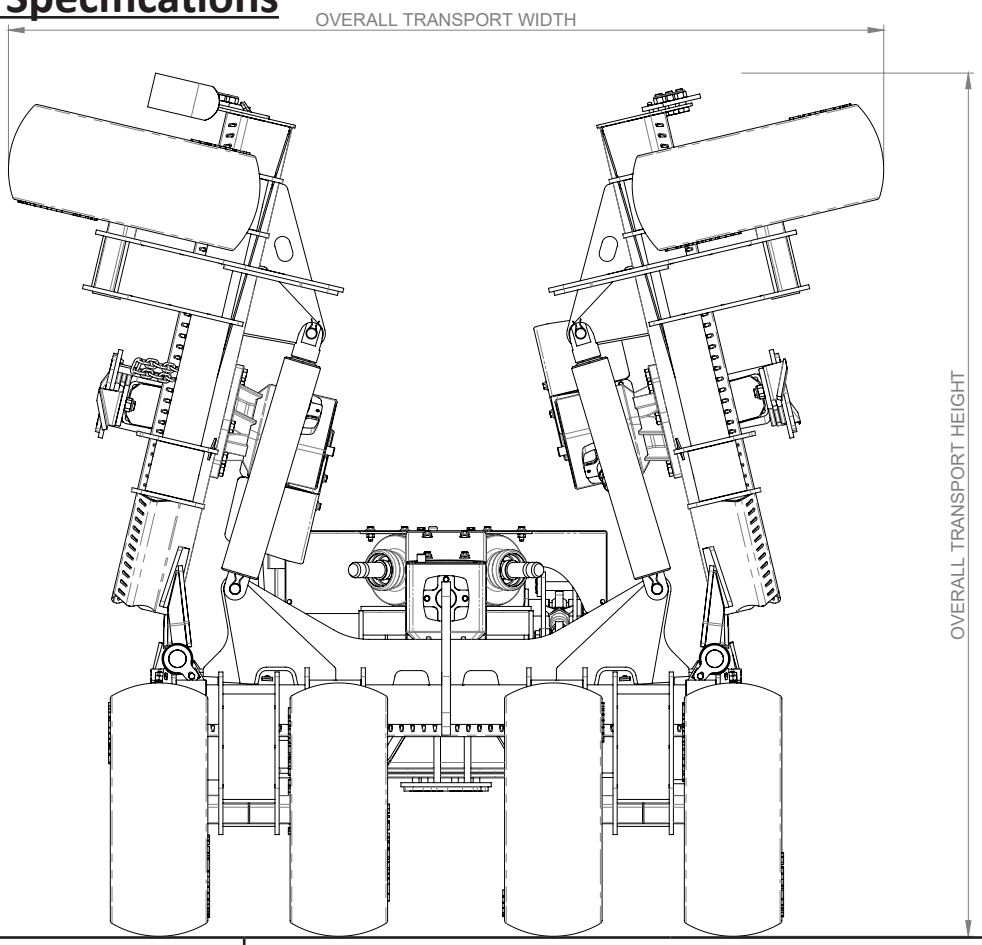

Dimensions*	Machine Size	
	15ft (4.6m)	20ft (6m)
Minimum PTO HP[1]	90HP	120HP
Overall Length[2] (m)	4.8	6.32
Overall Transport Width (m)	2.5	2.5
Overall Transport Height (m)	2.49	3.09
Overall Weight (kg)	3740	4400
Cut Height (mm)	18-410	18-410
Drawbar Weight (tonne)	2.5	3.0
Blade Tip Speed (ft/min)	16745	21948
Jack	3 Tonne	
Deck Material	6mm Deck, Fully Welded with 8mm side plates	
Gearbox	210 HP power matched driveline	
PTO Shafts	Comer T80 Series to boxes, Wide Angle VP9 input	
Clutch	Over run devise on input & 4 plate slip clutches on each V80 Shaft	
Skids	8mm Height Adjustable sides with 100 x 12mm spring steel base.	
Rotor Bar	100 x 14mm spring steel	
Blades	100 x 13mm swing back blades on hardened bushes.	
Tyres	Heavy duty flotation tyres 10/75-15.3 14 PLY	

*all dimensions and masses are provided as a guide only if accurate dimensions are required it is recommended the specific machine be measured.
1 - Ensure Tractor Drawbar can supprot weight.

2 - Overall Length based on machine in transport position. Machine length may vary when in operation depending on cut height.

Machine Application & Capabilities

General

Gason Delta mowers are designed and built to withstand the toughest of conditions from everyday contractor demands to the seasonal roadside slashing requirments, when cared for and maintained as suggested in this and the general operators manuals.

Operating Speed

It is recommended that the Gason Delta mowers be used at speeds of up to 8 - 15km/h Travelling at speeds in excess of this may affect cut quality and finish.

The speed will be dictated by the application, ground conditions, tractor HP and cutting height.

Gason recommend always commencing cutting at low operating speeds then steadily increasing speed. The operator should always be observant of the machine's cutting performance at all times to ensure a neat, even finish.

Cutting Height

The Gason Delta Mower is designed to slash grasses and general pasture and provide an even spread of cut material. It is designed to cut at low heights. In order to avoid premature wear or fatigue it is imperitave the machine be set-up correctly to avoid ground contact when cutting low.

Pull Angle

The Gason Delta Mower is designed to work through a fore-aft angle of ±15°from the horizontal. Working the machine over ruts and bumps greater than this may cause premature failure of the tow eye , pull or PTO's and may also damage blades and rotor bars.

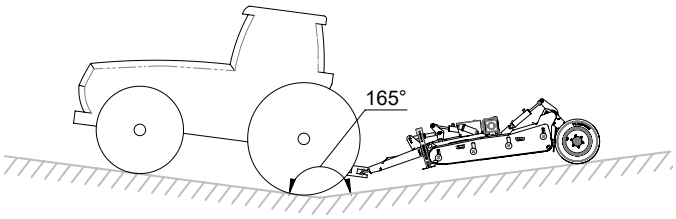

Wing Angle

The Delta Mower can operate in ground up to 45° above and 20° below horizontal as represented in the below image by letters A & B.

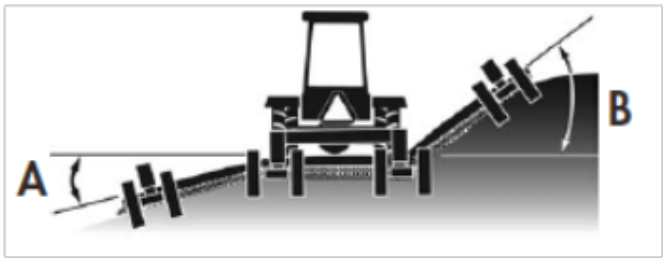

Gason recommend that at all times the wheels remain in contact with the ground when in operation. Failure to do this may result in excess stress on cylinders and may result in premature failure of the machine.

Trouble Shooting

Why am I getting excessive skid wear?

In most cases excessive skid wear is a result of incorrect machine set-up. Read the Tractor Connection section of the General Operators manual to aid in finding the set-up error. As a guide, skid position should always be approximately 12mm from the ground level when operating.

Why does my machine not follow the ground contour?

The Delta Wing Mower uses an hyraulic float system. In order for this to work the tractor control lever for the wing lift circuit must be put into the float position. Refer Tractor Operators manual for more information on how to do this. Failure to do this may result in premature wear of cylinder connection points or in extreme cases cracking around the hinges of the machine.

Why have my gearbox bolts come loose?

In most instances the bolts on the gearbox loosen as a result of severe load being placed back into the gearbox generally caused by continous scalping of the ground.

Note: refer to torque specification page.

Assembly Instructions

General

These assembly instructions should be read in conjunction with the “General” Operators Manual supplied. They are intended to provide model specific details in addition to those in the General operators Manual.

All Machine set-up should be conducted on flat level ground to ensure even set-up across the machine.

Pull

The pull on the Gason Delta wing will generally be shipped in a vertical position and some assembly will be required prior to conecting to the tractor.
The below image shows the position the pull it likely to be shipped in.

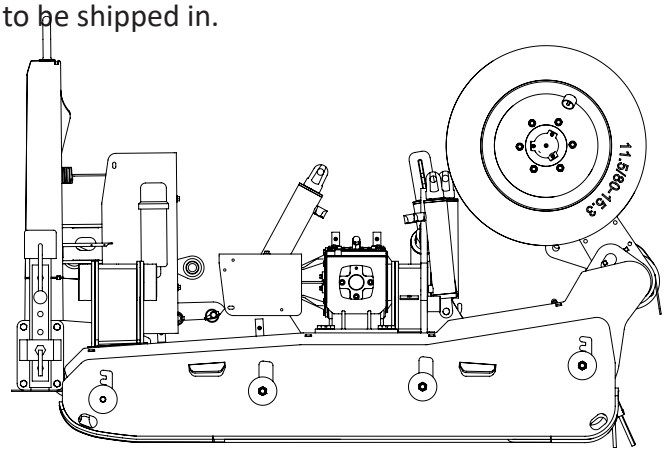

The Pull is a heavy components and will require the use of a crane or forklift to be moved into position.

Rotate pull to a horizontal position and fit hydraulic cylinder and spring adjuster. Once complete fit PTO shaft from idler shaft to tee box. Prior to fitting Input PTO read General Operators manual to ensure it is cut to correct length to suit and is tightened correctly.

Rear Crank

The rear crank on your Gason Delta Mower is likely to be shipped in the position shown above. Remove all tie downs and rotate crank again using a crane or forklift to sit wheels on the ground, connect hydraulic cylinders to crank plate and position wheels to allow bolts to be put into crank plates to secure.

Grease Point Locations

ITEM	DESCRIPTION	NO OF POINTS		GREASE INTERVAL (hrs)
		D15	D20	
1	REAR CRANK ARMS	8	8	8
2	HINGES	4	4	8
3	PULL BOSS	2	2	8
4	PULL SWIVEL EYE	1	1	8
5	PULL TRANSFER LINK	1	1	8
6	PTO'S	VARIES WITH SHAFTS		8
7	WHEEL BEARINGS	6	6	100

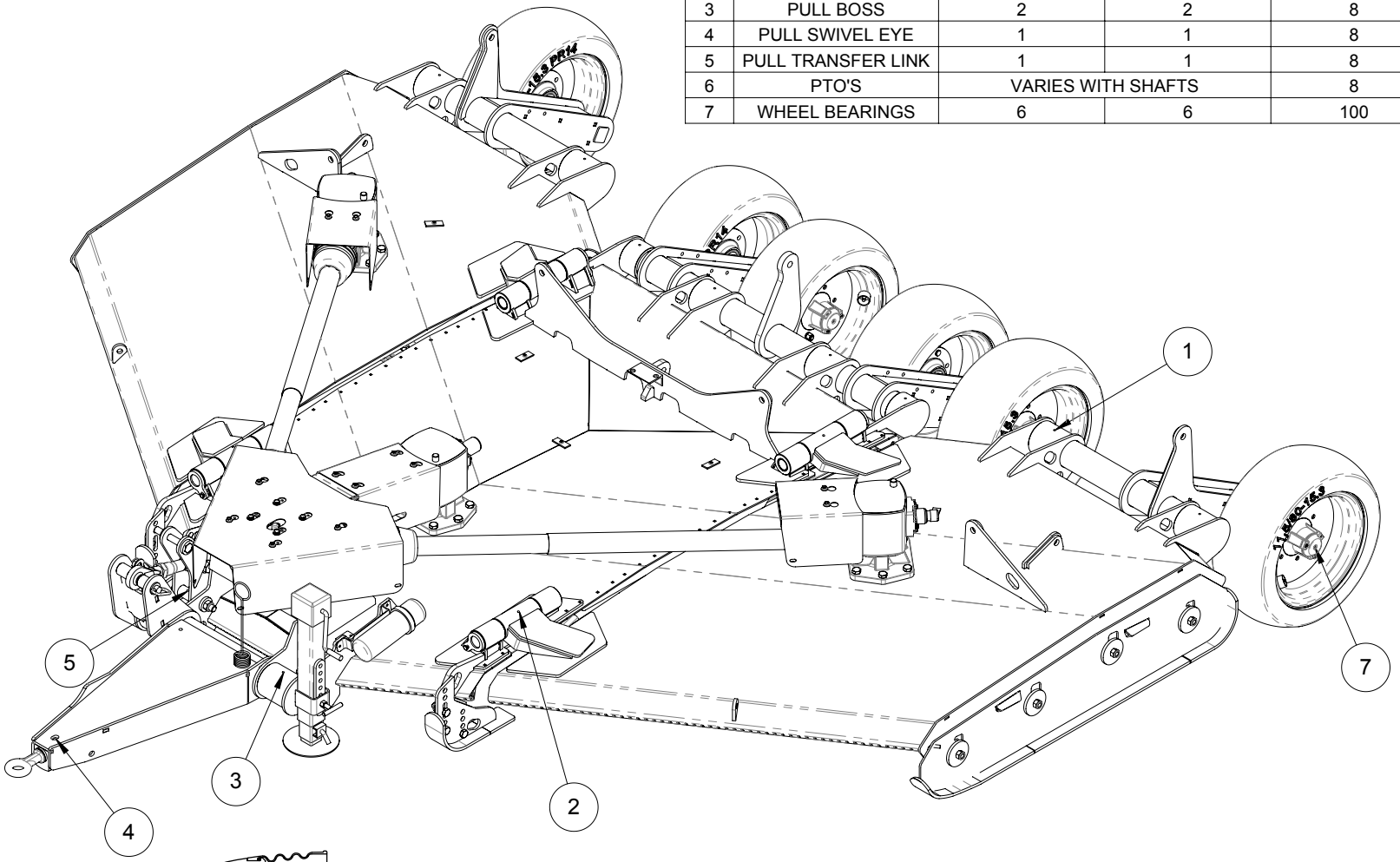

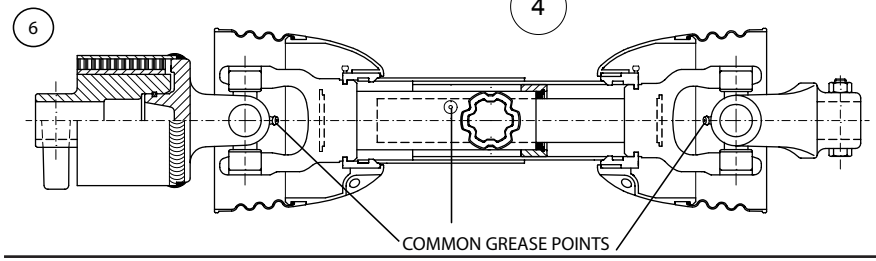

Parts Diagrams

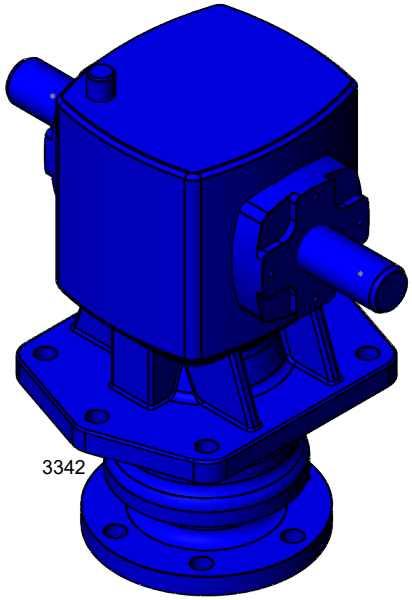

General Assembly

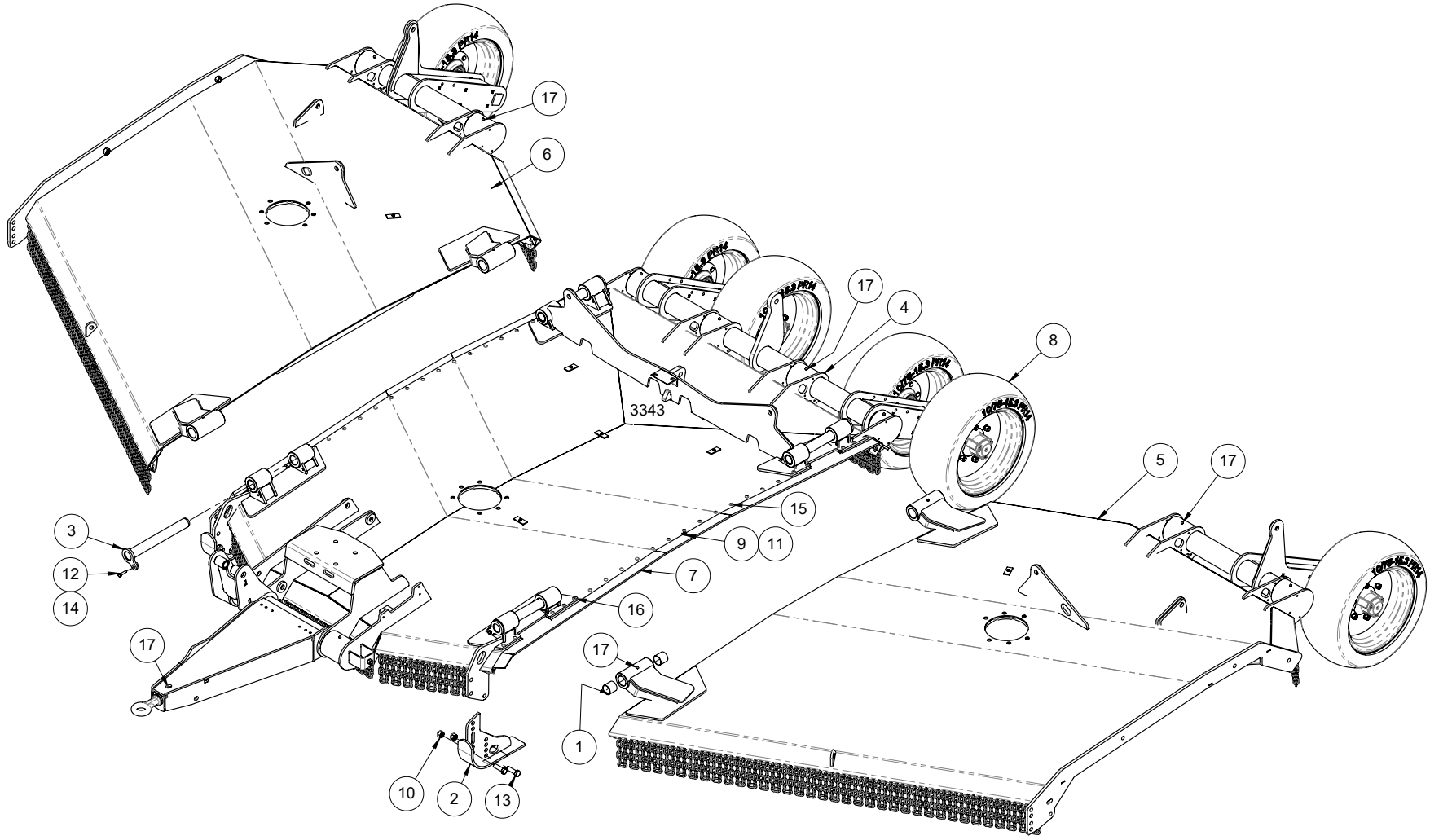

General Assembly (Continued)

Item	GPN	Description	Qty. 15’	Qty. 20’
1	205892	Bush Du- Ø50 x 50mm	8	8
2	223405	Skid - Anti Drop	2	2
3	223408	Pin-Wing Pivot	4	4
4	223390	D15 - Centre Deck Weldment	1	-
	223946	D20 - Centre Deck Weldment	-	1
5	223390	D15 - LH Wing Assembly	1	-
	223946	D20 - LH Wing Assembly	-	1
6	223390	D15 - RH Wing Assembly	1	-
	223946	D20 - RH Wing Assembly	-	1
7	223963	D15 - Flap - Wing Rubber	2	-
	223965	D20 - Flap - Wing Rubber	-	2
8	224979	Wheel Assy 10/75-15.3	6	6
9	903302	Nut Nyloc M8	46	46
10	903931	Nut Nyloc M20	4	4
11	907301	Washer Flat 5/16”x1”x1.2 ZP	46	46
12	909005	Washer Spring M10 ZP	4	4
13	913713	Bolt M20 x 65 GR8.8 Hex ZP	4	4
14	917413	Screw Set M10 x 45	4	4
15	926309	M8 x 30 Coach Bolt	26	26
16	926318	M8 x 50 Coach Bolt	20	20
17	8001380	Nipple Grease 1/8” NPT	15	15
	223676	Chain 8mm 11 Links - Mower	Ref.	Ref.

Pull

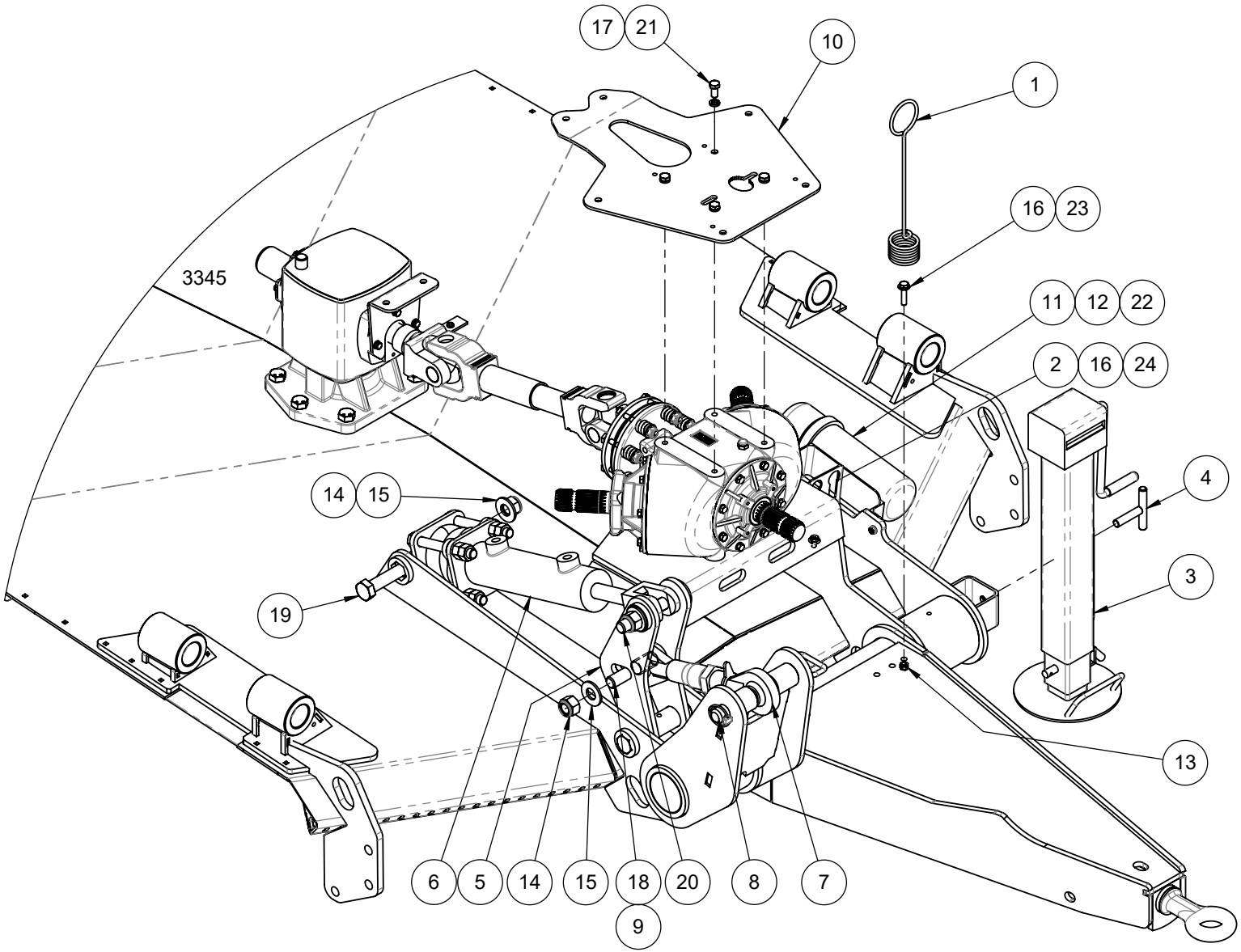

Pull (Continued)

Item	GPN	Description	Qty.	
			15’	20’
1	211089	Hose Stand Spring	1	1
2	212530	Bracket Hyd. Hose Tip	1	1
3	222669	Welded 3T Jack Assy	1	1
4	222671	Handle Locking	1	1
5	223404	Bracket - Link	1	1
6	223530	Cylinder Assy 3” x 8	1	1
7	223536	Link Arm - Shortened	1	1
8	223750	Pin Drawbar 1 1/4” x 8-1/4”	1	1
9	223751	Boss	1	1
10	223632	Bracket - Guard Mount D15	1	-
	223952	Bracket - Guard Mount D20	-	1
11	224257	Document Holder	1	1
12	902302	Nut Whiz Flange M8x1.26P Hex ZP	3	3
13	903406	Nut Nyloc M10	1	1
14	903911	Nut Nyloc 1” UNC Hex ZP	4	4
15	906902	Washer Flat 1” x 2-1/8” ZP	4	4
16	907503	Washer Flat M12x24x1.6ZP	3	3
17	908604	Washer Spring 1/2 x 5/32 x 5/32 ZP	4	4
18	912908	Bolt 1” X 6” UNC	1	1
19	912913	Bolt 1” x 9” UNC	2	2
20	912920	Bolt 1” X 6.5” UNC	1	1
21	916604	Screw Set 1/2” UNC x 1”	4	4
22	917309	Screw Set M8x25x1.25P	3	3
23	917413	Screw Set M10x45 GR8.8	1	1
24	917419	Screw Set M10x16 GR8.8	2	2

Decals

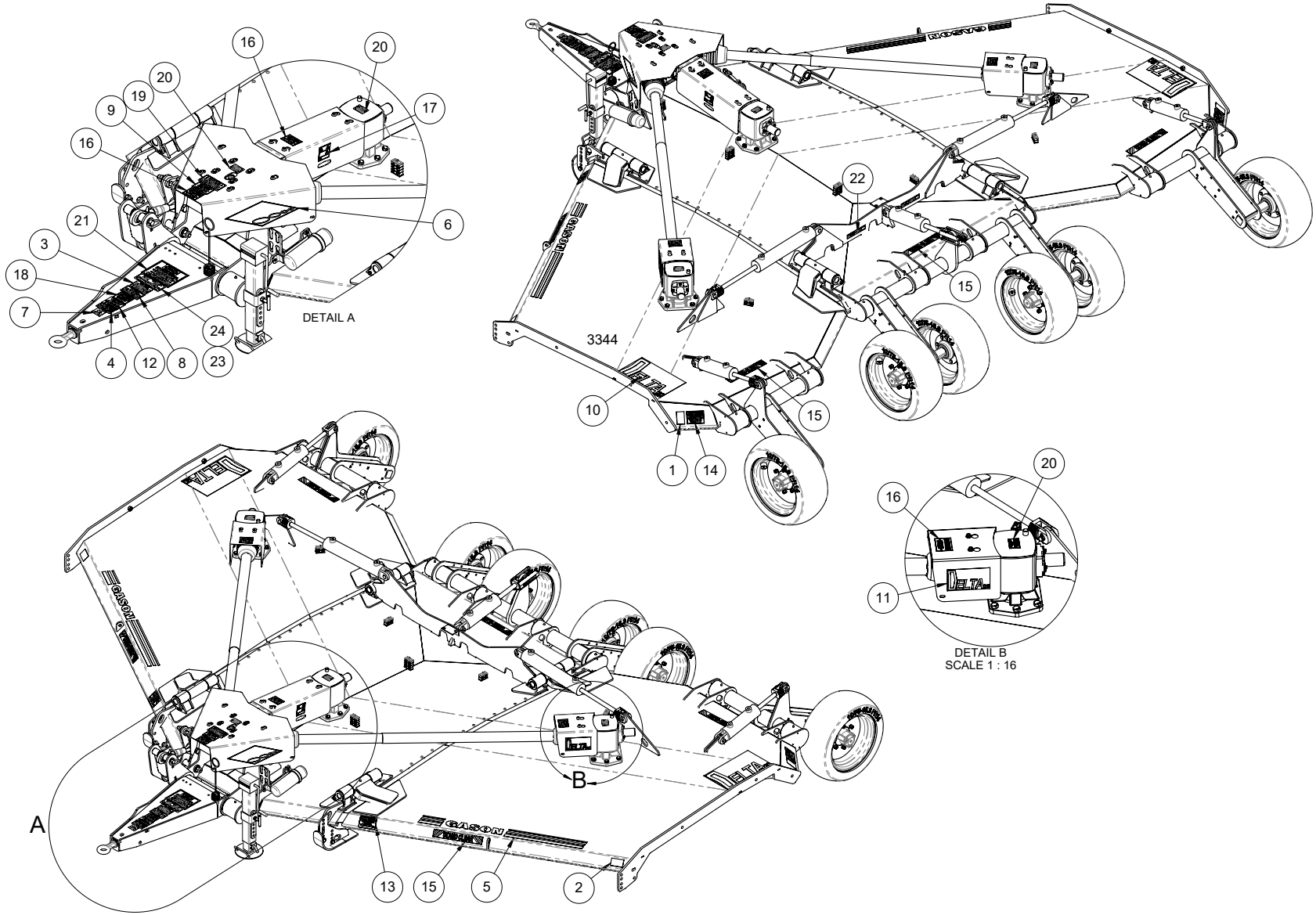
16
20
20
19
9
16
17
6
21
3
18
7
24
4
12
8
23
DETAIL A
22
3344
15
10
15
1
14
20
16
11
DETAIL B
SCALE 1 : 16
A
B
13
15
5
2

Decals (Continued)

Item	GPN	Description	QTY	
			15’	20’
1	205830	Tape Red Reflective	2	2
2	206694	Tape White Reflective	2	2
3	206955	Decal - Warning Safety	1	1
4	206995	Decal - T/Port Warning	1	1
5	237734	Decal - Gason	2	2
6	207247	Decal - Gason Logo	1	1
7	207998	Decal - TMA	1	1
8	216072	Decal - Do Not Ride	1	1
9	223523	Decal - Transport Speed 20km/h	1	1
10	224243	Decal - Delta 15 Large	2	-
	224245	Decal - Delta 20 Large	-	2
11	224244	Decal - Delta 15 Small	2	-
	224246	Decal - Delta 20 Large	-	2
12	224318	Decal - 1000 RPM	1	1
13	224320	Decal - Warning Blade	2	2
14	224321	Decal - Warning Debris	2	2
15	224322	Decal - Stand Clear	5	5
16	224323	Decal - Caution Guard	4	4
17	224327	Decal - PTO Rotating	1	1
18	224328	Decal - Caution Stop	1	1
19	226754	Decal - PTO Shaft Length	1	1
20	227410	Decal - Oil Fill Level	4	4
21	228234	Decal - Danger Notice	1	1
22	237737	Decal - Gason An Australian	2	2
23	8001251	Screw Drive 1/2”x6gU ZP	4	4
24	8001418	Tag - Serial Number	1	1

Single Blade Set-up

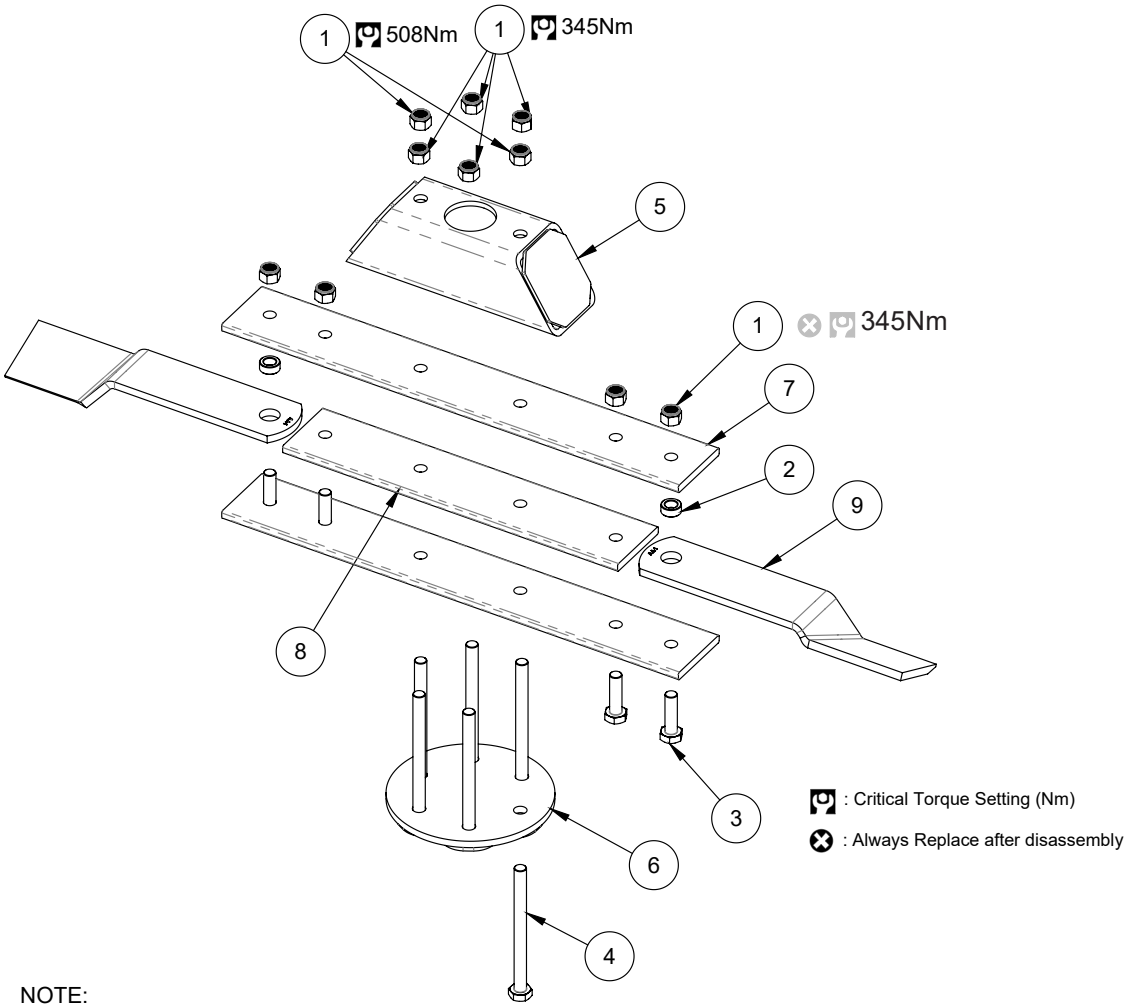

NOTE:

FOR CLOCKWISE SET-UP ITEM (9) BECOMES GPN:223542
ALL OTHER PARTS REMAIN THE SAME

Blade Bolt Kit - GPN: 225718

Includes:

223545: Bush - Blade 3/4”ID x 13mm

903803: Nut Nyloc 3/4” UNF Gr 8

912818: Bolt 3/4 UNF x 2-3/4” HT

A - 345Nm
B - 345 Nm
C - 508Nm

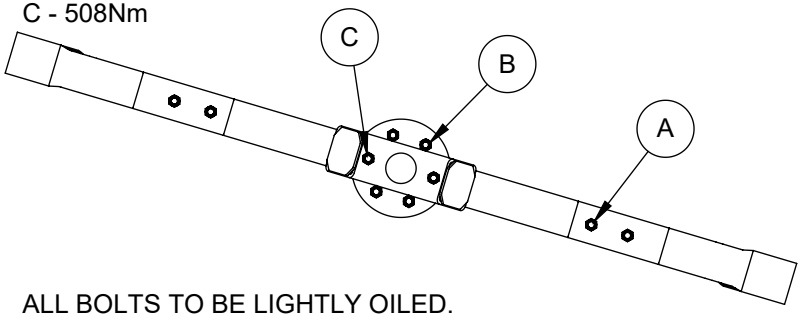

ALL BOLTS TO BE LIGHTLY OILED.

ENSURE BLADES ROTATE FREELY AFTER TORQUING BOLTS.

Item	GPN	Description	Qty. 15’	Qty. 20’
1	903803	Nut Nyloc 3/4" UNF Gr8	Ref.	Ref.
2	223545	Bush - Blade 3/4" ID x 13mm	Ref.	Ref.
3	912818	Bolt 3/4" UNF x 2-3/4" Gr8	Ref.	Ref.
4	912853	Bolt 3/4" x 9" UNF Gr8	Ref.	Ref.
5	228729	Spacer - Rotor Bar Block	1	1
6	223564	Clamp - Rotor	1	1
7	223544	Rotor Bar - 725mm	2	-
	230585	Rotor Bar - 1200mm	-	2
8	223722	Rotor Bar Spacer - 725mm	1	-
	230586	Rotor Bar Spacer - 1200mm	-	1
9	223543	Blade - 450mm ACW (Shown)	2	2
	223542	Blade - 450mm CW	Ref.	Ref.

Dual Blade Kit (Option)

GPN: 226254

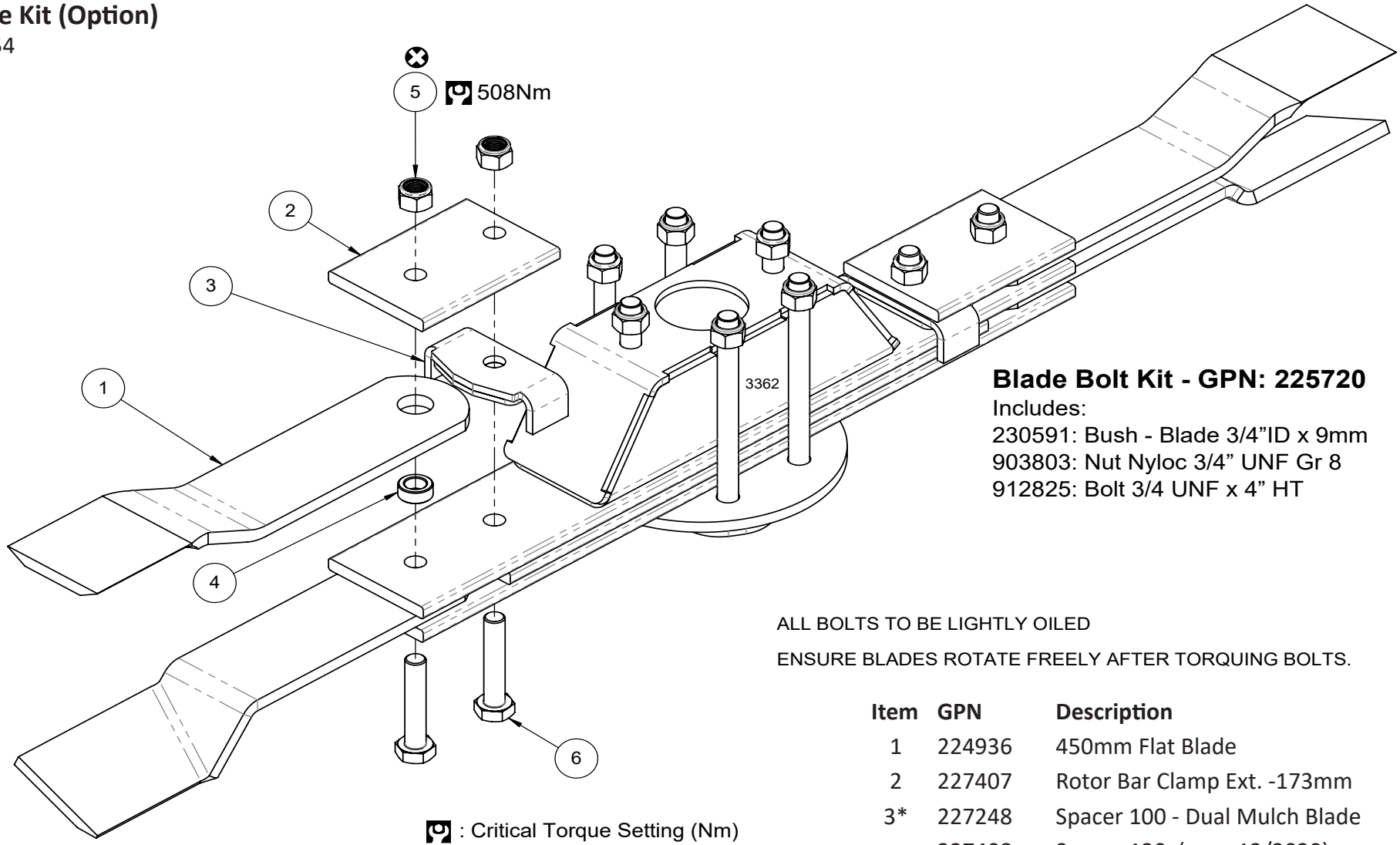

Blade Bolt Kit - GPN: 225720

Includes:
230591: Bush - Blade 3/4”ID x 9mm
903803: Nut Nyloc 3/4” UNF Gr 8
912825: Bolt 3/4 UNF x 4” HT

ALL BOLTS TO BE LIGHTLY OILED

ENSURE BLADES ROTATE FREELY AFTER TORQUING BOLTS.

Item	GPN	Description	Qty.
1	224936	450mm Flat Blade	2
2	227407	Rotor Bar Clamp Ext. -173mm	2
3*	227248	Spacer 100 - Dual Mulch Blade	2
	227408	Spacer 120 (pre - 12/2020)	2
4	230591	Bush - Blade 3/4" ID x 13mm	2
5	903803	Nut Nyloc 3/4" UNF Gr8	4
6	912825	Bolt 3/4" x 4" UNF Gr8	4

: Critical Torque Setting (Nm)

: Always Replace after Disassembly

* Note: When ordering item 3, measure rotor bar bar width and select correct spacer to suit.

Blade Installation - Rear Throw

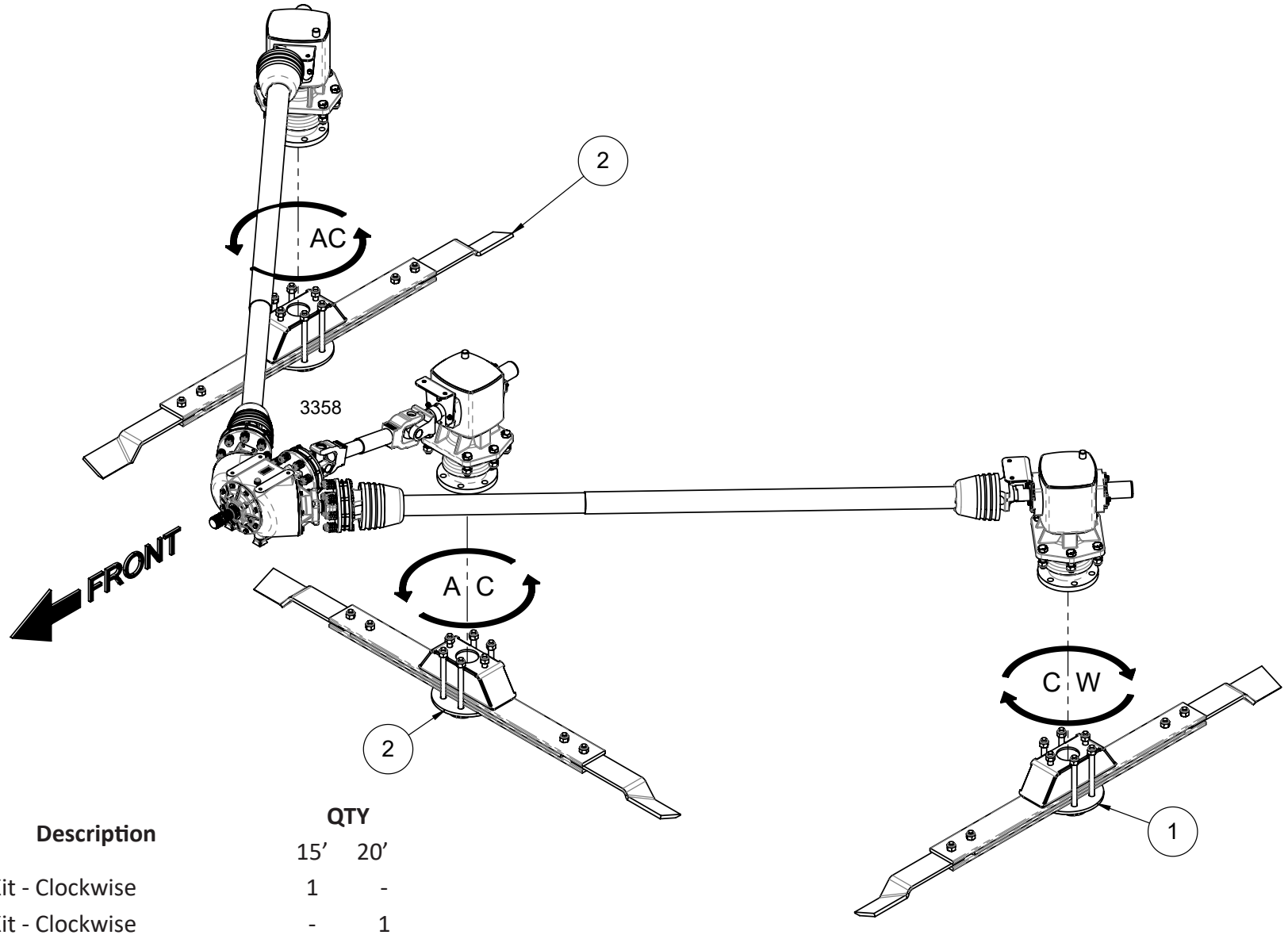

Item	GPN	Description	QTY 15’	QTY 20’
1	236624	Blade Kit - Clockwise	1	-
2	236626	Blade Kit - Clockwise	-	1
3	236625	Blade Kit - Anti Clockwise	2	-
4	236627	Blade Kit - Anti Clockwise	-	2

Blade Installation - Mulch Throw

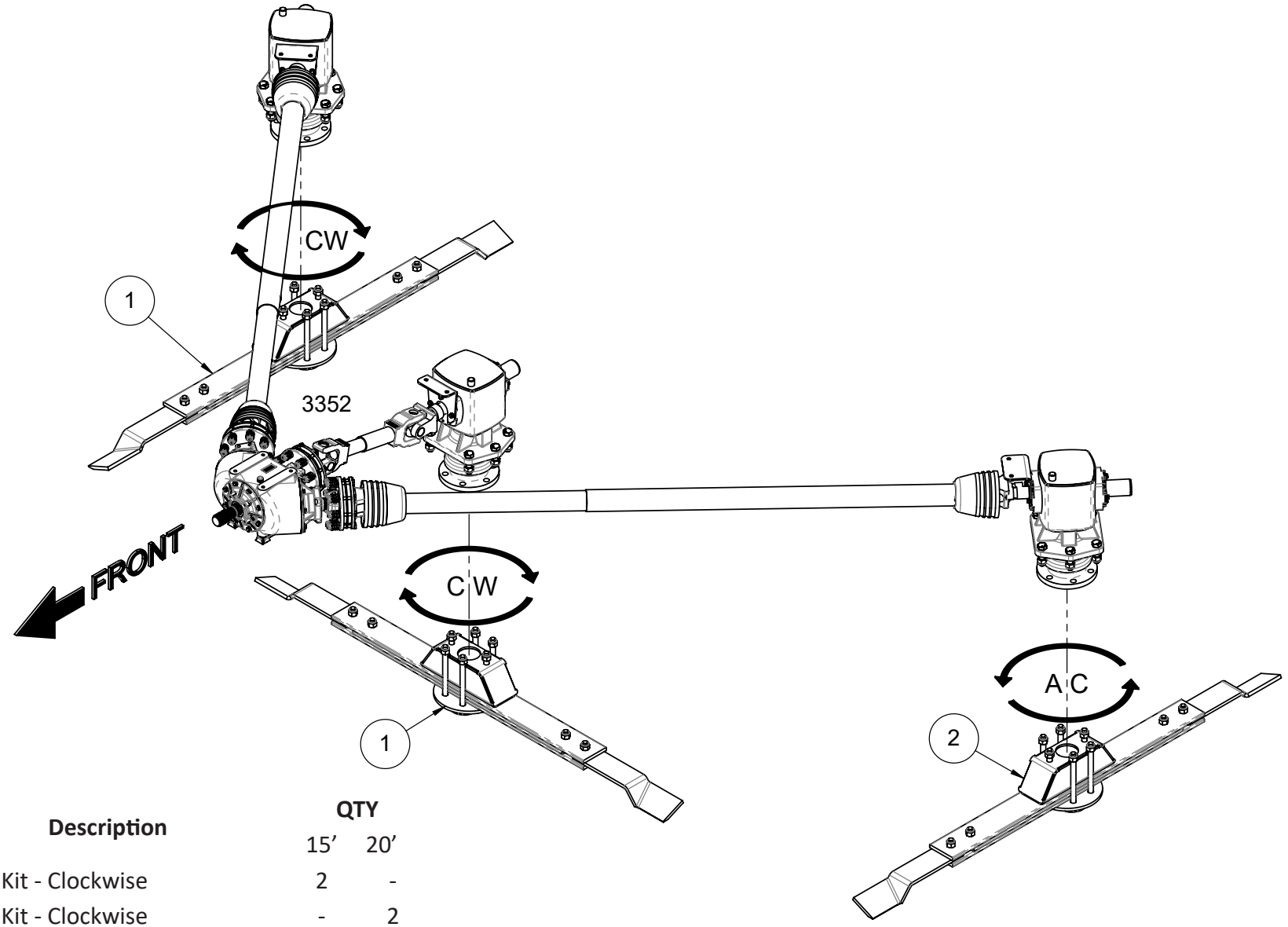

Item	GPN	Description	QTY	
			15’	20’
1	236624	Blade Kit - Clockwise	2	-
2	236626	Blade Kit - Clockwise	-	2
3	236625	Blade Kit - Anti Clockwise	1	-
4	236627	Blade Kit - Anti Clockwise	-	1

Axle

GPN: 220724

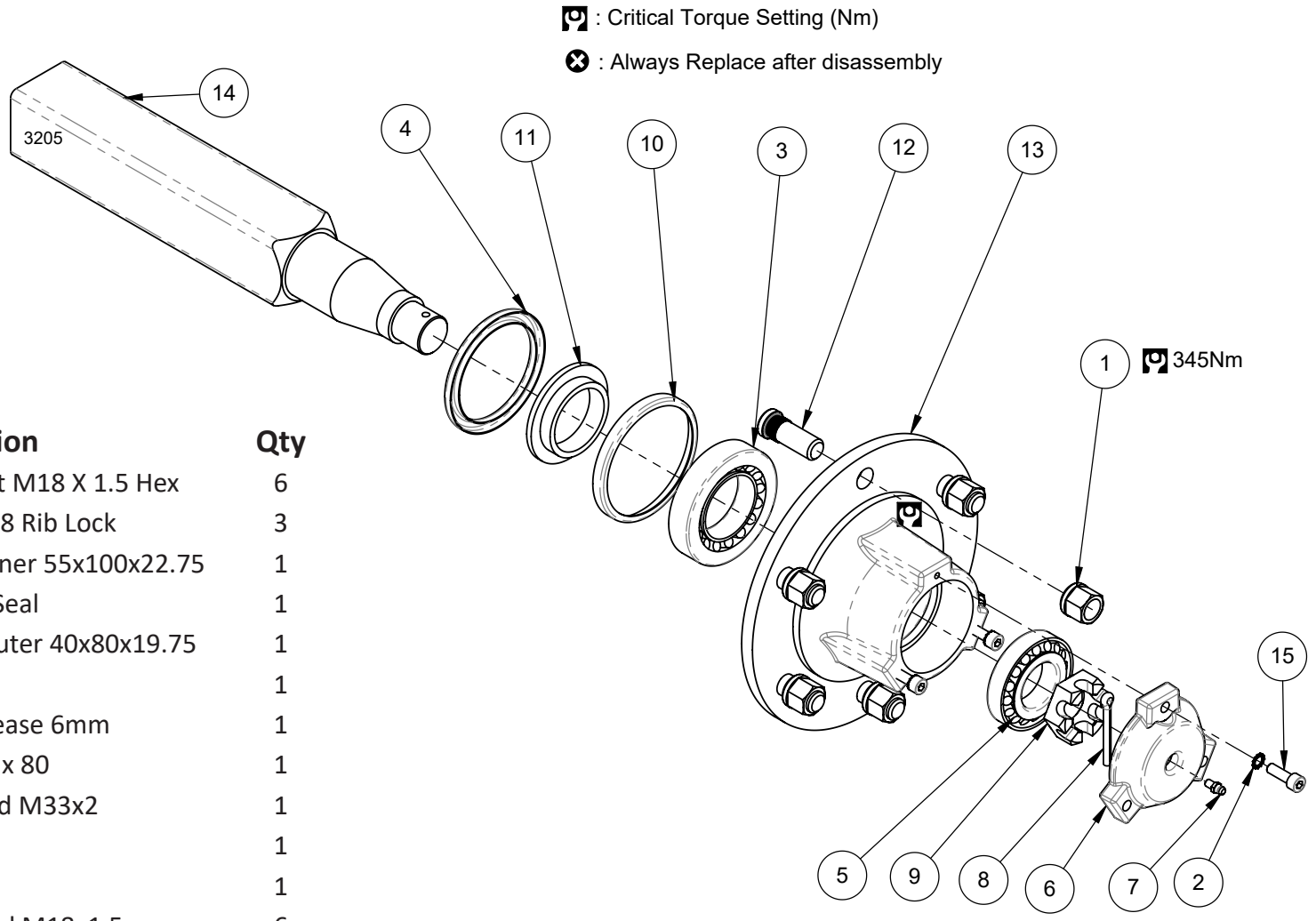

Item	GPN	Description	Qty
1	204622	Wheel Nut M18 X 1.5 Hex	6
2	217232	Washer M8 Rib Lock	3
3	205298	Bearing Inner 55x100x22.75	1
4	220737	Triple Lip Seal	1
5	205297	Bearing Outer 40x80x19.75	1
6	220740	Dust Cap	1
7	220741	Nipple Grease 6mm	1
8	220742	Pin Split 8 x 80	1
9	220745	Nut Slotted M33x2	1
10	220746	Wear Ring	1
11	220747	Seal Ring	1
12	204621	Stud Wheel M18x1.5	6
13	220749	Hub Machined	1
14	221039	Axle Stub Machined	1
15	922316	Screw Cap M8 x 25mm	3
16	204678	Axle Assembly	Ref

Wing PTO Shaft

GPN: 223534 - D15
GPN: 224039 - D20
Post August 2017
Shown

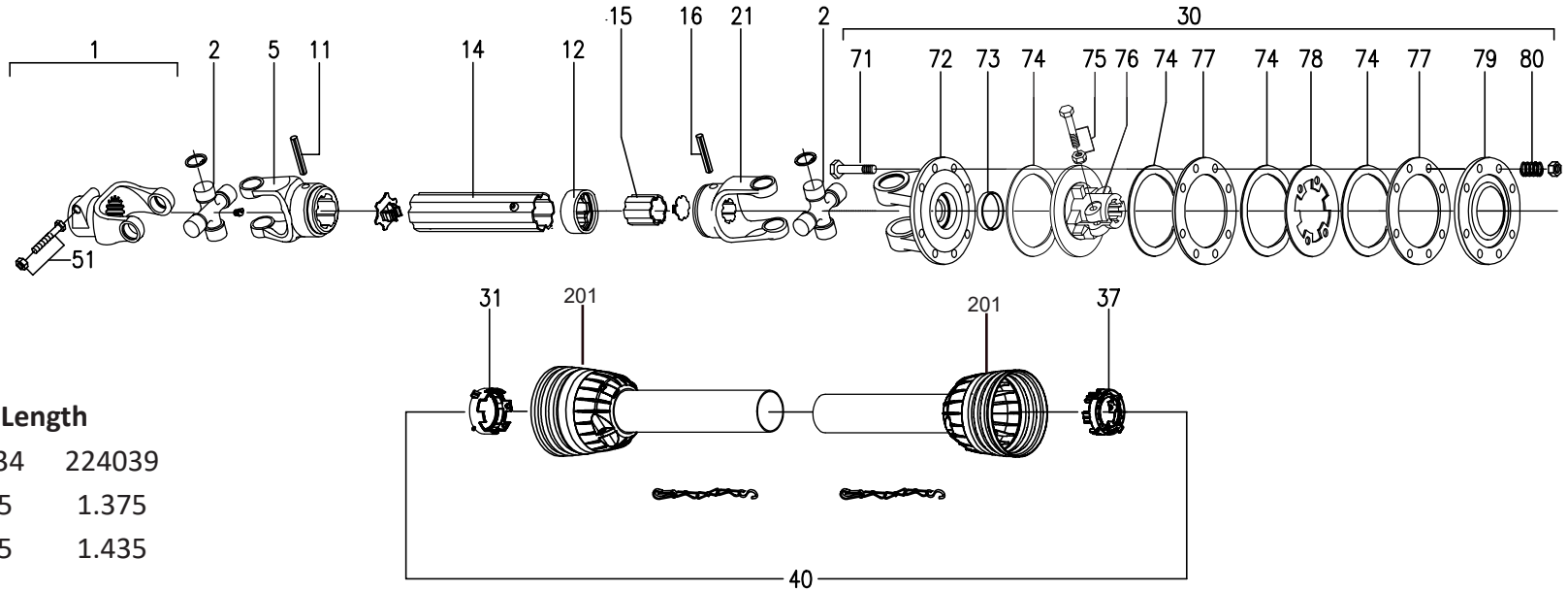

PTO Tube Length

GPN	223534	224039
226389	0.975	1.375
226390	1.035	1.435

Item	GPN	Description	Qty
1	226280	Interfacing Clamp/Yoke 135 (1 3/4"Z20)	1
2	224992	Cross Journal Set	2
5	225992	Outer Yoke	1
11	226272	Roll Pin	1
12	226266	Wiper	1
14	226389	Outer Tube Rislan 3m	1
15	226390	Inner Tube Rislan 3m	1
16	226268	Roll Pin	1
21	226265	Inner Yoke	1
30	234162	Friction Clutch F45 (2000Nm)	1
31	226291	Guard retaining collar for outer tube	1
37	226292	Guard retaining collar for inner tube	1
40	226267	Complete guard with instructions (D15)	1
	226293	Complete guard with instructions (D20)	1

Item	GPN	Description	Qty
51	913730 & 903930	Bolt M16x80 & Nut M16	2
71	913416 & 903407	Bolt M10x100x1.5 & Nut M10	8
72	226282	Flanged Yoke	1
73	226283	Bush	1
74	226284	Lining Ring	4
75	234163	Bolt Set M14x70 & Nut	1
76	234164	Clutch Support F45 (1 3/4" Z20)	1
77	226287	Inner Plate	2
78	226288	Intermediate Plate	1
79	226289	Pressure Plate	1
80	226290	Spring	8
201	226400	Guard Standard (Tube not Included)	2

Input PTO Shaft (05/2021 - Current)

GPN: 237570 (Comer VP9 WA)

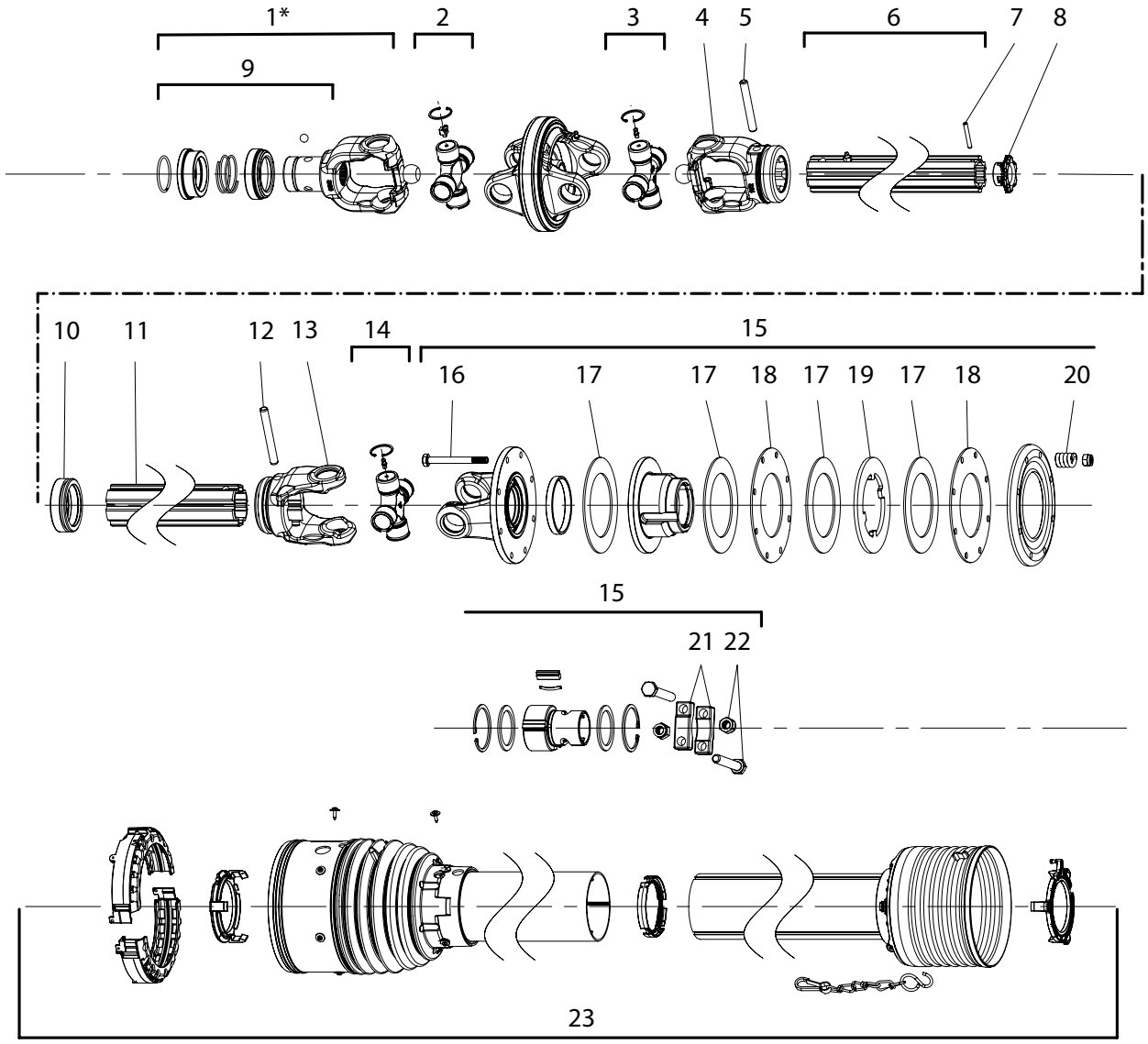

Item	GPN	Description	Qty.
1	237687	QR Yoke VP9 1-3/8" Z21	1
1	237868	QR Yoke VP9 1-3/4" Z20	*
1	237869	QR Yoke VP9 1-3/8" Z6	*
2	237870	Uni-Joint VP9 WA (60° nip)	1
3	237872	Uni-Joint VP9 WA (Std)	1
4	237873	Inner Yoke - WA	1
5	226272	Roll Pin - Inner Tube	1
6	237875	Innter Tube	1
7	216510	Roll Pin - 6x40	1
8	237876	Wiper - Inner Tube	1
9	226305	Yoke Collar Kit - Z21	1
10	237877	Outer Tube Bush	1
11	237878	Outer Tube	1
12	237874	Roll Pin - Outer Tube	1
13	237879	Outer Yoke	1
14	237880	Uni-Joint VP9	1
15	237881	Clutch Assembly 1400Nm VP9	1
16	903406 & 913416	M10x100 Bolt & Nut	8
17	226310	Clutch Lining Ring	4
18	225821	Clutch Plate	2
19	225820	Intermediate Clutch Plate	1
20	226290	Clutch Spring	8
21	226304	Bridge - Clamp	2
22	903703 & 913645	M14x100 & Nut	2
23	237882	PTO Guard Assembly VP9	1

Input PTO Shaft (Pre- 05/2021)

GPN: 223535 (Comer V80 WA)

Item	GPN	Description	Qty.	Item	GPN	Description	Qty.
1	224946	Collar Yoke CO3 for CV-Joint (1 3/8" Z21)	1	40	226307	Complete Guard with Instructions Manual	1
2	226273	Cross Journal Set for CV-Joint	2	51	226320	Circlip	1
5	226294	Wide Angle Double Yoke	1	52	226321	Sliding Sleeve Collar	1
8	226275	Outer Yoke	1	53	226322	Spring	1
11	226272	Roll Pin for Outer Tube	1	54	226323	Fixed Sleeve	1
12	226266	Wiper	1	55	226324	Ball 1/2"	3
14	226389	Outer Tube Rislan (m)	0.875	73	226299	Retaining Washer	1
15	226390	Inner Tube Rislan (m)	0.935	74	226300	Carriage Spring	3
16	226268	Poll Pin for Inner Tube	1	75	226301	Tang	3
21	226265	Inner Yoke	1	76	226315	Hub R15 (1 3/4" Z20)	1
22	224992	Cross Journal Set	1	77	226302	Retaining Washer	1
26	226295	Complete Overrunning Clutch R15 (3800Nm)	1	78	226303	Inner Circlip	1
27	226296	Set Sheet & Screw	1	79	226304	Bridge	2
30	226298	Bearing Ring	1	80	913648	Bolt M14x100x1.5	2
31	226291	Guard Retaining Collar for Outer Tube	1		904602	Nut M14	2
37	226292	Guard Retaining Collar for Inner Tube	1	200	226305	Kit Collar 1 3/8"	1
39	226297	Guard Cone Set	1	201	226400	Guard Standard (Tube not Included)	1
				202	226401	Guard Short (Tube not Included)	1

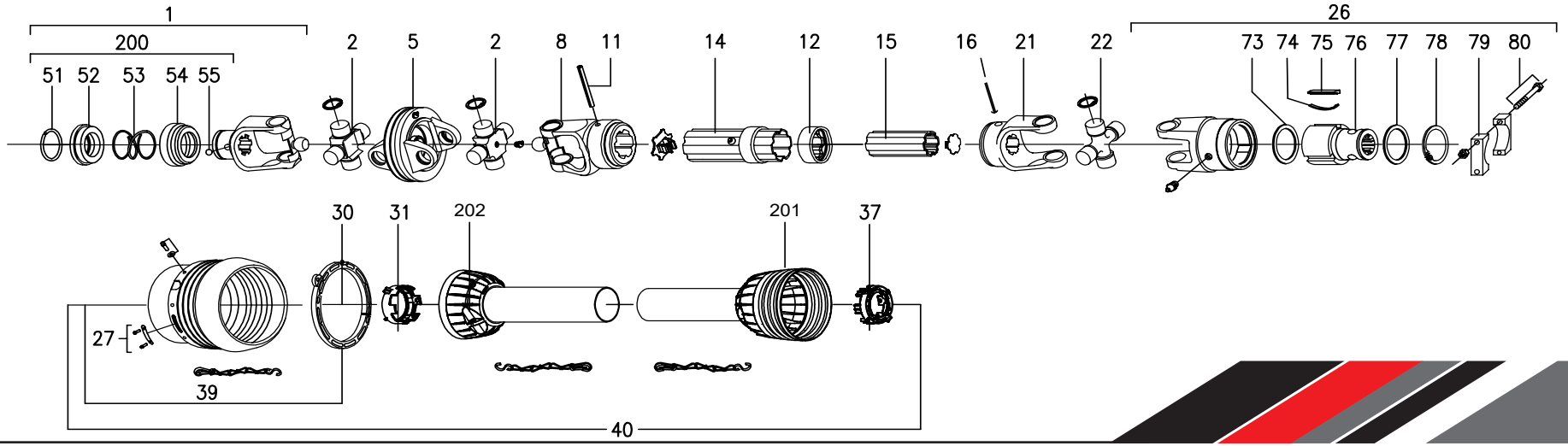

Tranfser PTO Shaft (D15)

GPN: 223565

Post August 2017 Shown

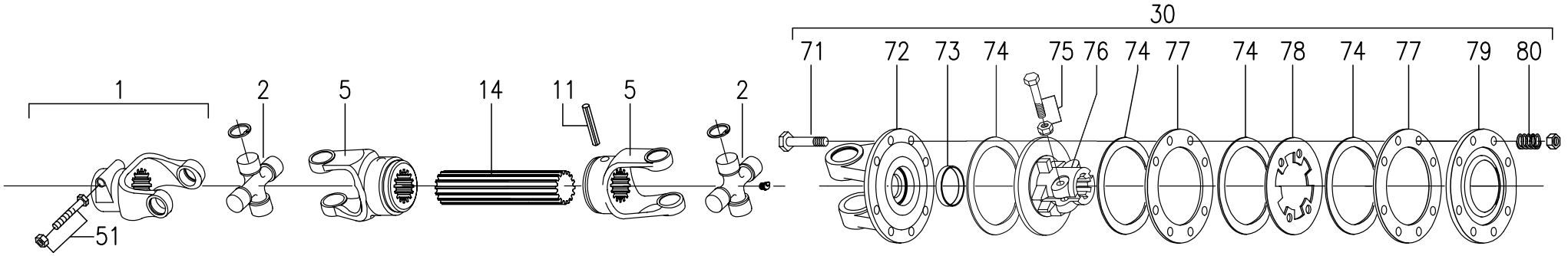

Item	GPN	Description	Qty.	Item	GPN	Description	Qty.
1	226280	Complete Yoke 135 (1 3/4" Z20)	1	72	226282	Flanged Yoke	1
2	224992	Cross Jouirnal Set	2	73	226283	Bush	1
5	226278	Inner Yoke	2	74	226284	Lining Ring	4
11	226279	Roll Pin	1	75	234163	Bolt Set M14x70 & Nut	1
14	N/A	Inner Profile	1	76	234164	Clutch Support F45 (1 3/4" Z20)	1
30	234162	Complete Friction Clutch F45 (2000Nm)	1	77	226287	Inner Plate	2
51	913730	Bolt M16x80	2	78	226288	Intermediate Plate	1
	903930	Nut M16	2	79	226289	Pressure Plate	1
71	913416	Bolt M10x100 1.5	8	80	226290	Spring	8
	904402	Nut M10	8				

Transfer PTO Shaft (D20)

GPN: 224040

Post August 2017 Shown

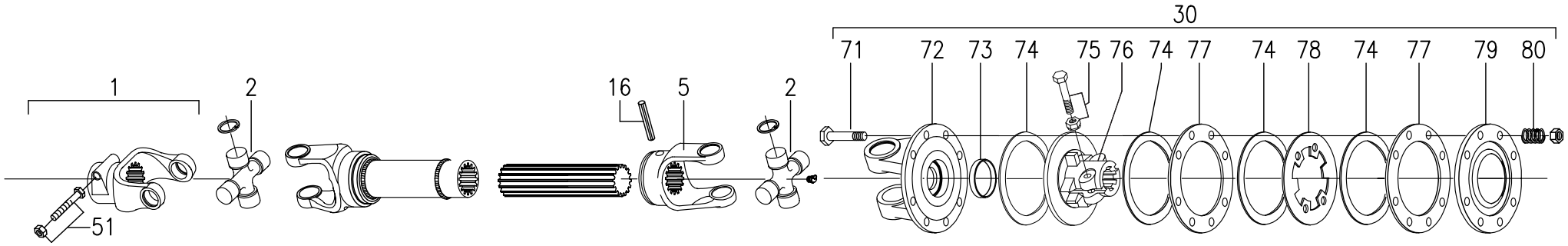

Item	GPN	Description	Qty.
1	226280	Complete Yoke 135 (1 3/4" Z20)	1
2	224992	Cross Journal Set	2
5	226278	Inner Yoke	1
16	226279	Roll Pin	1
30	234162	Complete Friction Clutch F45 (2000Nm)	1
51	913730	Bolt M16x80	2
	903930	Nut Nyloc M16	2
71	913416	Bolt M10x100 1.5	8
	904402	Nut Nyloc M10	8
72	226282	Flanged Yoke	1
73	226283	Bush	1
74	226284	Lining Ring	4
75	234163	Bolt Set M14x70 & Nut	2
76	234164	Clutch Support F45 (1 3/4" Z20)	1
77	226287	Inner Plate	2
78	226288	Intermediate Plate	1
79	226289	Pressure Plate	1
80	226290	Spring	8

Gearbox - Cutterhead

GPN: 223533 - 1000 RPM 1:1 Ratio

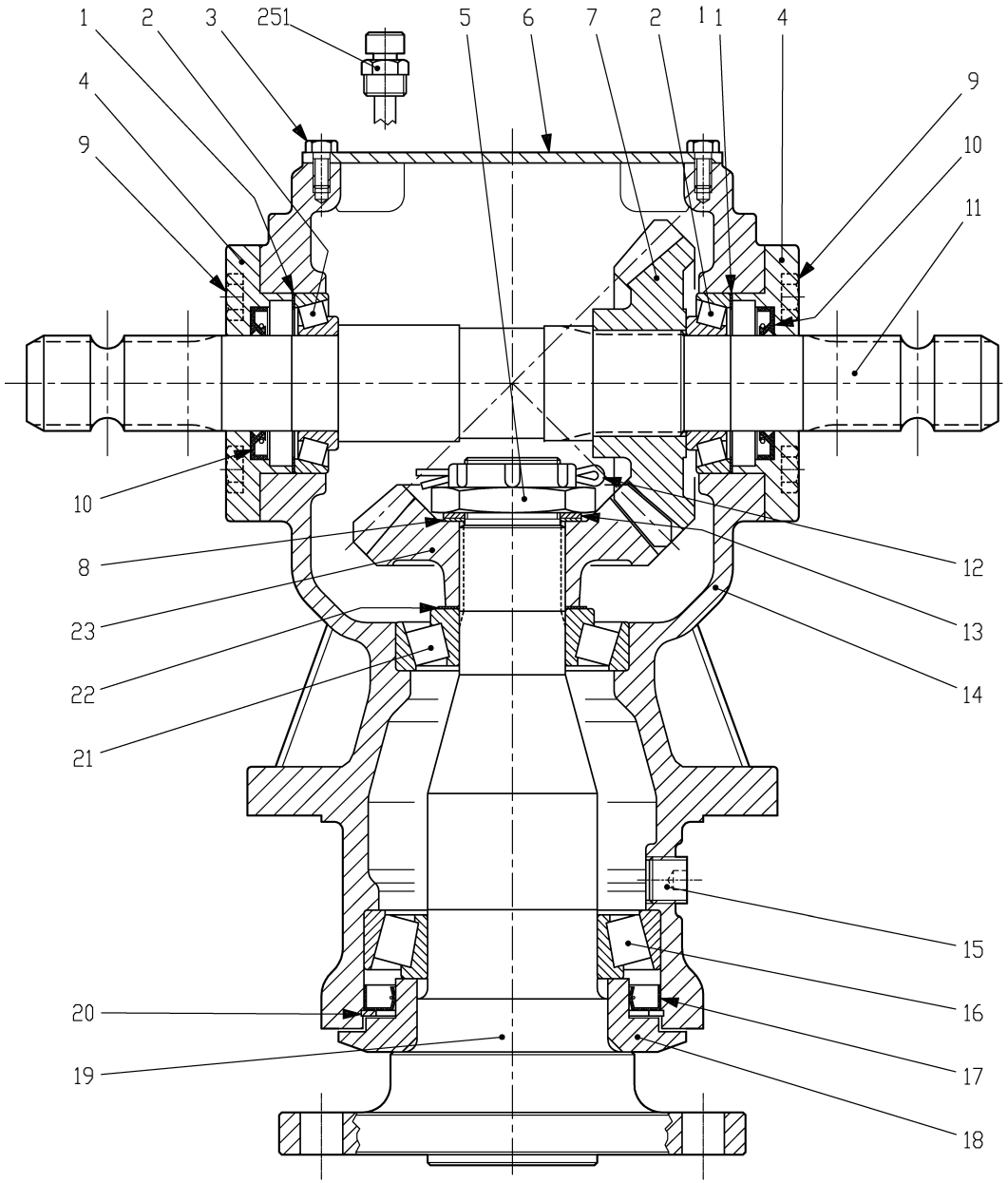

Item	GPN	Description	Qty.
1	226405	Shim 84.7	2
2	207969	Bearing 30209	2
3	N/A	Bolt M8x18, 8.8	6
4	226406	Cover, Input Shaft	2
5	226408	Nut M4 5X1.5	1
6	226407	Cover, Top	1
7	225699	Crown Wheel Z21 M7.14	-
	225703	Crown Wheel Z27 M6.3	1
8	226409	Shim Pinion 45.3x1.0	1
9	917601	Bolt M12x25, 10.9	8
10	226410	Double Lip Seal 45x72x8	2
11	225701	Shaft Input	1
12	226413	Cotter Pin B6x80	1
13	226414	Shim 45.3x2.5	1
14	226415	Casing T1	1
15	N/A	Plug 1/2" GAS	1
16	220413	Bearing 32216	1
17	226416	Oil Seal 110x140x12	1
18	226417	Bush	1
19	226418	Shaft Rotor	1
20	226419	Snap Ring BR140	1
21	226420	Bearing 30310	1
22	226421	Shim 70.3	1
23	225700	Gear Pinion	1
251	225504	Plug 1/2" GAS Breather	1

Gearbox - Power Divider

GPN: 223532

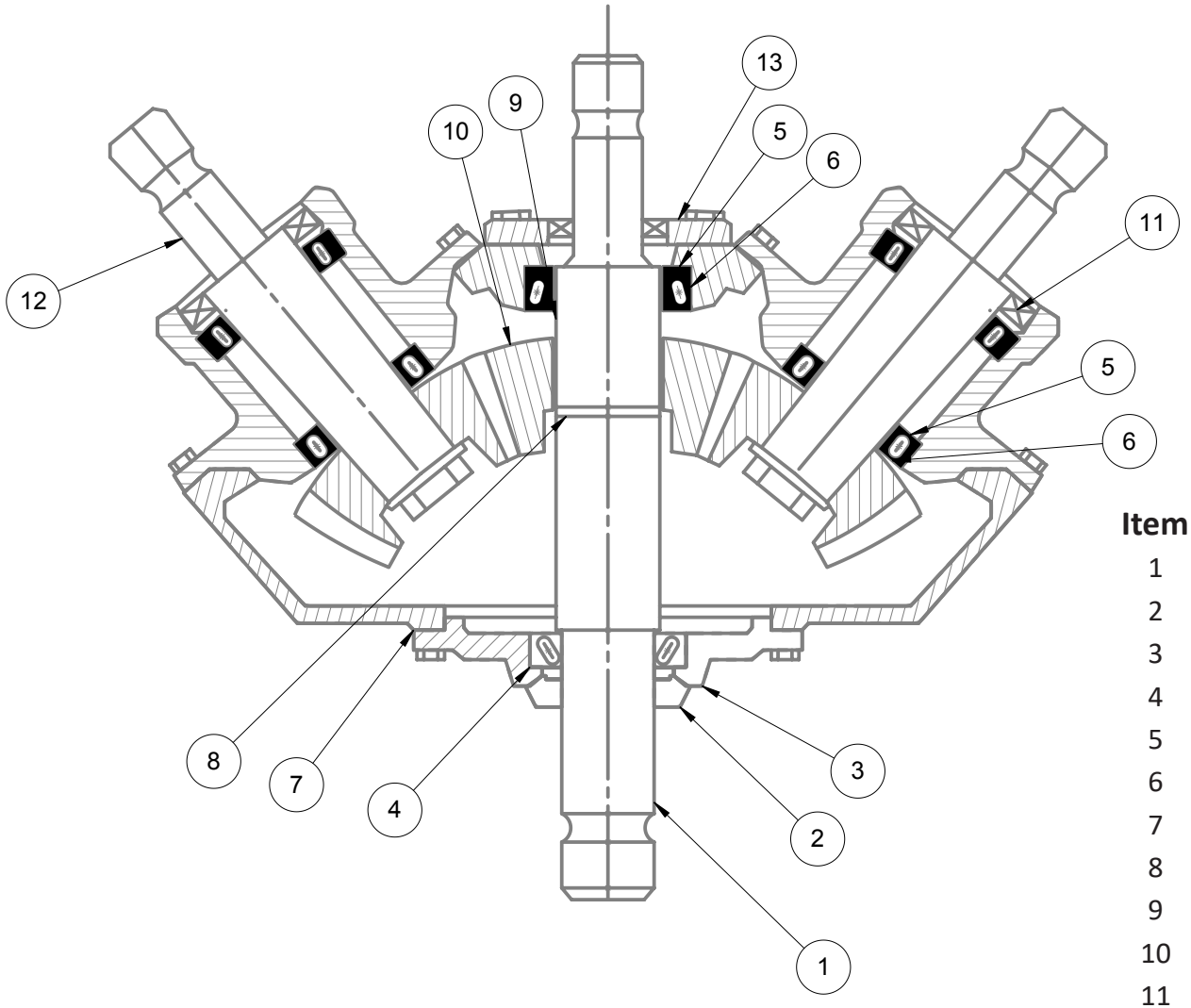

Item	GPN	Description	Qty
1	228271	Through Shaft 1-3/4" 20 SP Typ	1
2	227423	Input Seal	3
3	228272	Input Cap	1
4	228273	Cup Bearing	1
5	228274	Output Bearing Cone	5
6	228275	Output Bearing Cup	5
7	228276	Shim Gasket	As Req.
8	228277	Circlip	1
9	228278	Spacer	1
10	228279	Gear 16 Tooth	3
11	228280	Wing Shaft Seal	2
12	228281	Wing Shaft 1-3/4" 20 SP	1
13	228282	Output Cap	1

Driveline - Rear Throw

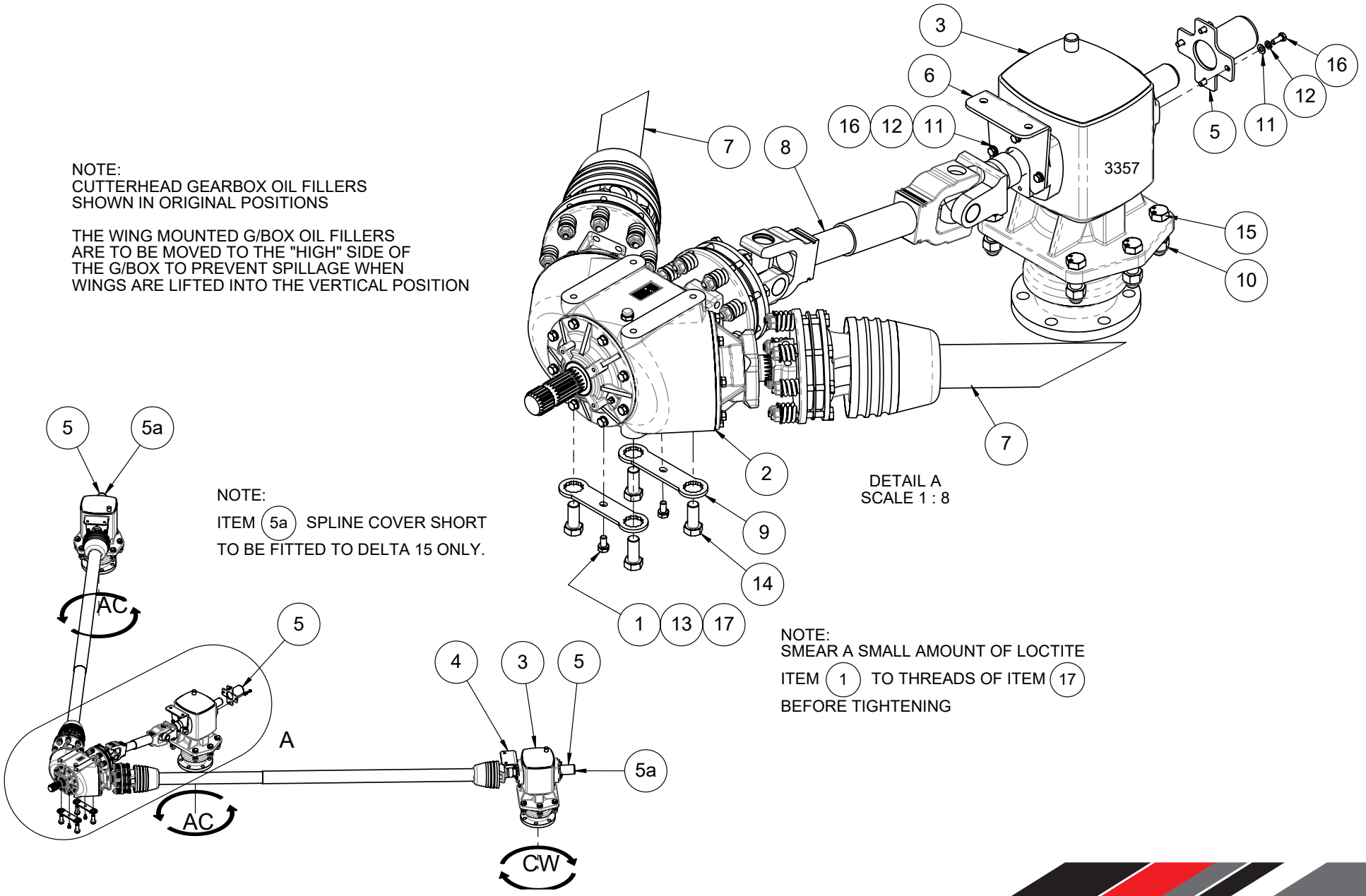

Driveline - Rear Throw (Continued)

Item	GPN	Description	Qty.	
			15’	20’
1	210075	Adhesive Loctite 243	0.1	0.1
2	223532	Gear Box - Power Divider 3 Way	1	1
3	223533	Gear Box - Cutterhead 1:1	3	3
4	223634	Bracket- Guard Mount	2	2
5	223636	Guard - Spline Cover Long	1	3
5a	223721	Guard - Spline Cover Short (D15)	2	-
6	223635	Bracket- Guard Mount Front (D15)	1	-
	223953	Bracket- Guard Mount Front (D20)	-	1
7	223534	Shaft PTO V80 Wing D15 Comer	2	-
	224039	Shaft PTO V80 Wing D20 Comer	-	2
8	223565	Shaft PTO E80 255mm Comer	1	-
	224040	Shaft PTO E80 380mm Comer	-	1
9	236817	Lock Plate	2	2
10	903933	Nut Nyloc M20	18	18
11	907412	Washer Flat M8 x 17 ZP	21	21
12	909004	Washer Spring M8 ZP	21	21
13	909005	Washer Spring M10x2.35x2.4 Z/P	2	2
14	912810	Bolt 3/4” UNC x 1-3/4” HT	4	4
15	913808	Bolt M20 x 75 Gr 10.9 ZP	18	18
16	917308	Screw Set M8 x 20 x 1.25	21	21
17	917418	Screw Set M10 x 20 S/S	2	2

Driveline - Mulch Throw

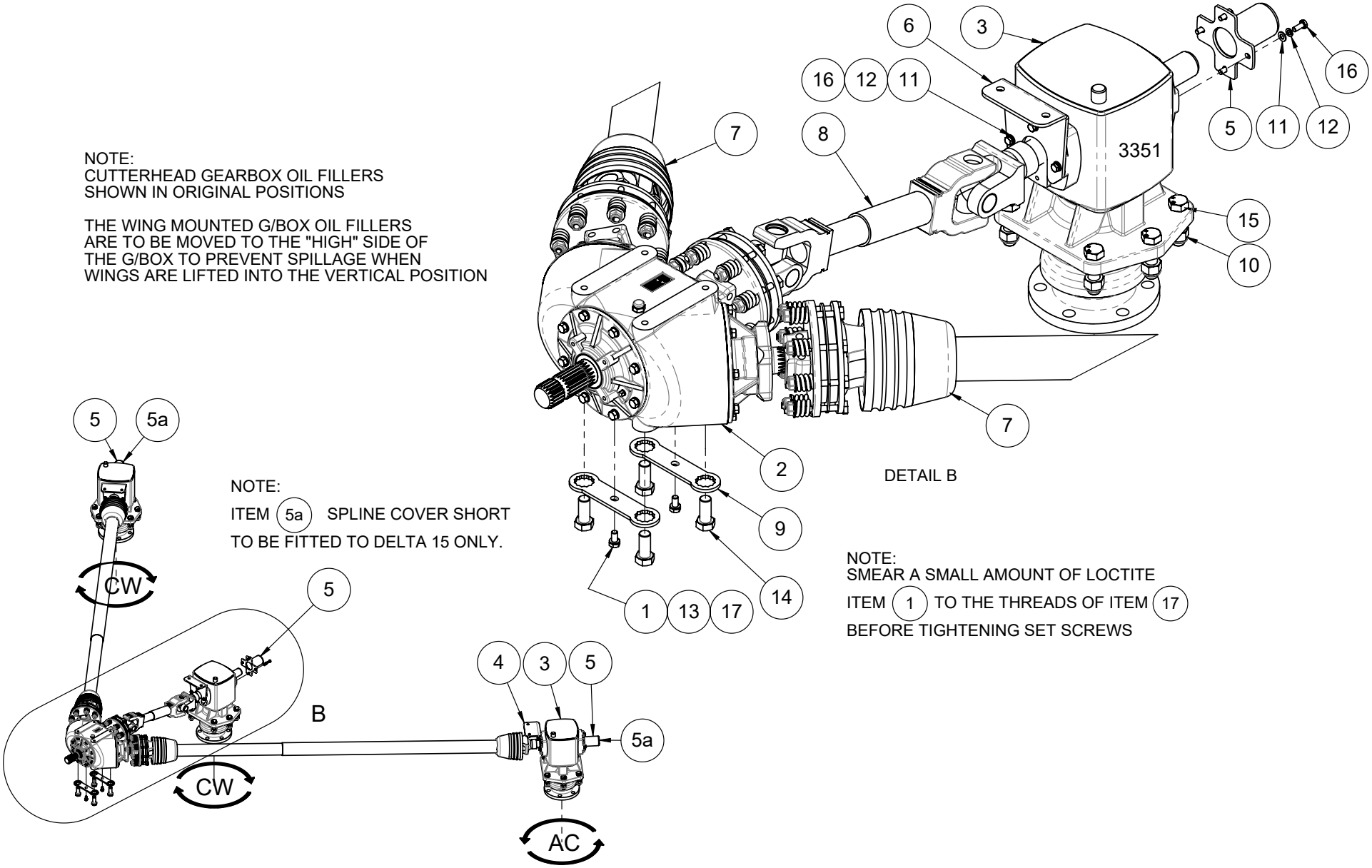

Driveline - Mulch Throw (Continued)

Item	GPN	Description	Qty.	
			15’	20’
1	210075	Adhesive Loctite 243	0.1	0.1
2	223532	Gear Box - Power Divider 3 Way	1	1
3	223533	Gear Box - Cutterhead 1:1	3	3
4	223634	Bracket- Guard Mount	2	2
5	223636	Guard - Spline Cover Long	1	3
5a	223721	Guard - Spline Cover Short (D15)	2	-
6	223635	Bracket- Guard Mount Front (D15)	1	-
	223953	Bracket- Guard Mount Front (D20)	-	1
7	223534	Shaft PTO V80 Wing D15 Comer	2	-
	224039	Shaft PTO V80 Wing D20 Comer	-	2
8	223565	Shaft PTO E80 255mm Comer	1	-
	224040	Shaft PTO E80 380mm Comer	-	1
9	236817	Lock Plate	2	2
10	903933	Nut Nyloc M20	18	18
11	907412	Washer Flat M8 x 17 ZP	21	21
12	909004	Washer Spring M8 ZP	21	21
13	909005	Washer Spring M10x2.35x2.4 Z/P	2	2
14	912806	Bolt 3/4” UNC x 1-1/2” HT	4	4
15	913808	Bolt M20 x 75 Gr 10.9 ZP	18	18
16	917308	Screw Set M8 x 20 x 1.25	21	21
17	917412	Screw Set M10 x 20 Gr 8.8 ZP	2	2

Driveline Guards

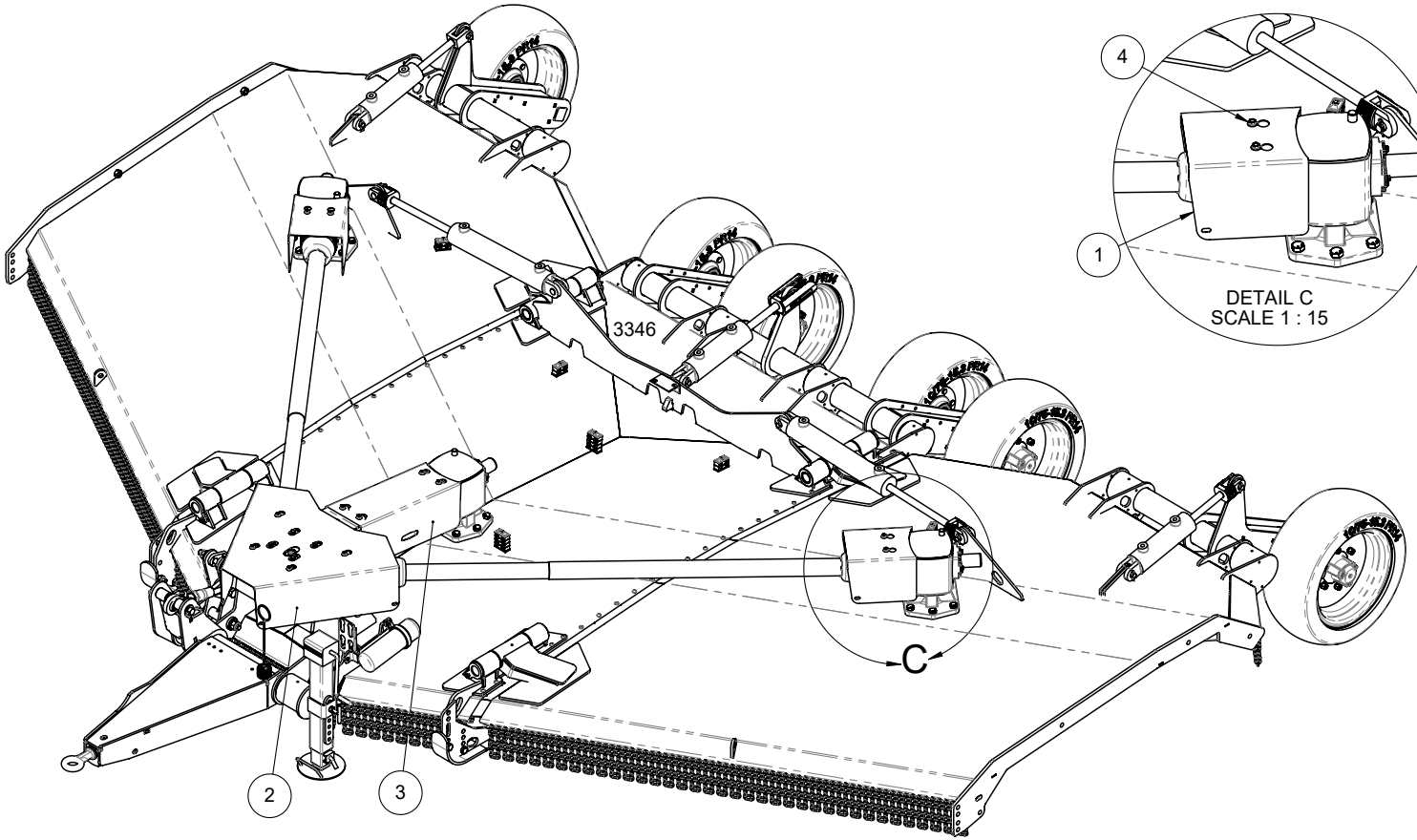

Item	GPN	Description	QTY 15’	QTY 20’
1	223630	Panel - Guard	2	2
2	223631	Panel - Guard	1	1
3	223633	Panel - Guard	1	-
	223951	Panel - Guard	-	1
4	917615	Screw Set M12 x 30 Purlin	12	12

Guards - Rear Throw

Item	GPN	Description	Qty 15’	Qty 20’
1	223400	Delta 15 Base Mower	1	-
	223945	Delta 20 Base Mower	-	1
2	226827	Washer 50 OD x 22 ID x 6	8	8
3	236246	D15 - Full Side Skid Assy	2	-
	236445	D20 - Full Side Skid Assy	-	2
4	909002	M20 Spring Washer	8	8
5	913713	Bolt M20 x 65 GR8.8 Hex ZP	8	8

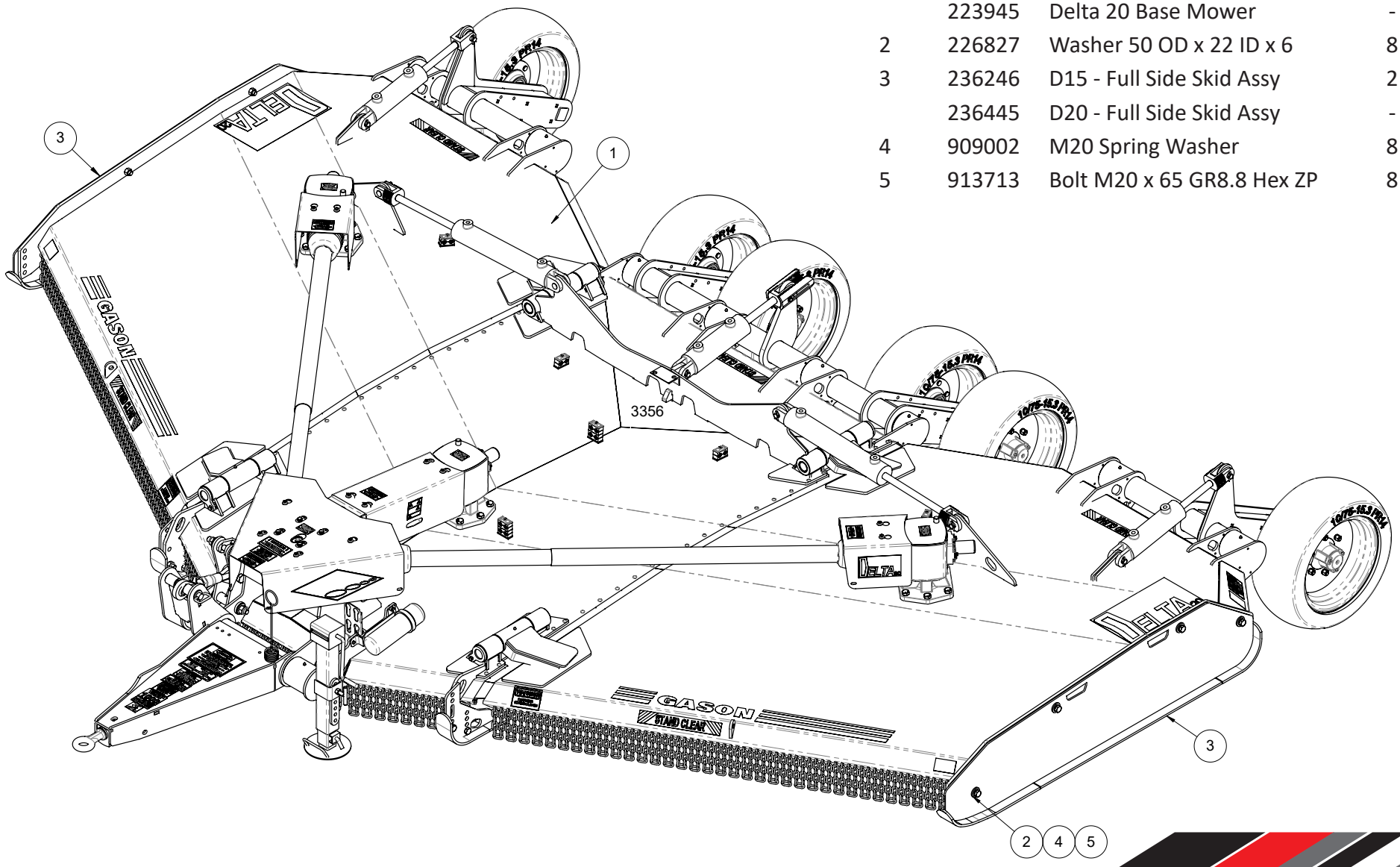

Guards - Mulch Throw

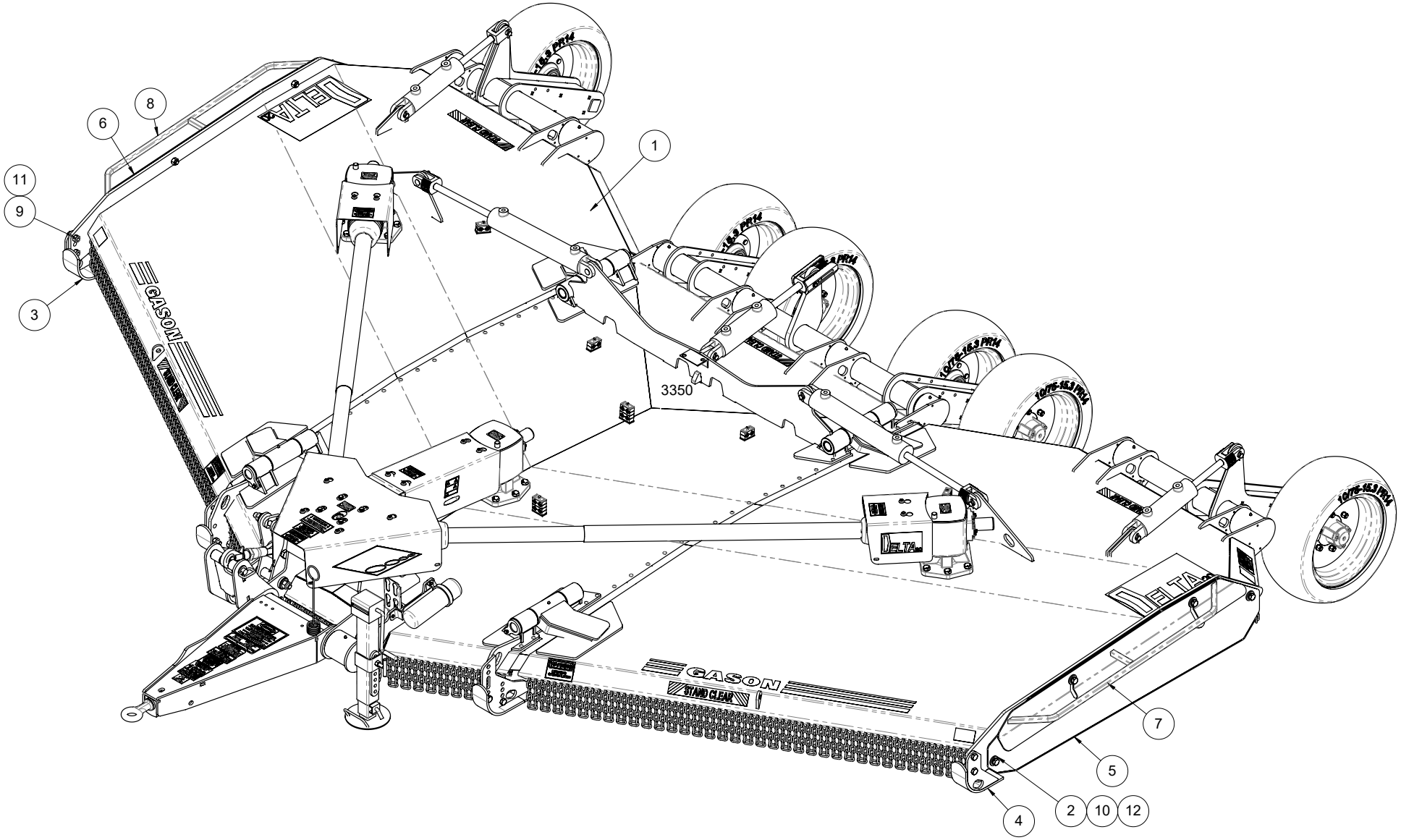

Guards - Mulch Throw (Continued)

Item	GPN	Description	Qty 15’	Qty 20’
1	223400	Delta 15 Base Mower	1	-
	223945	Delta 20 Base Mower	-	1
2	226827	Washer 50 OD x 22 ID x 6	8	8
3	233794	Skid - Front Right	1	1
4	233795	Skid - Front Left	1	1
5	235998	D15 - Full Side Skid Assy LH	1	-
	236443	D20 - Full Side Skid Assy LH	-	1
6	235999	D15 - Full Side Skid Assy RH	1	-
	236444	D20 - Full Side Skid Assy RH	-	1
7	235996	D15 - Guard Assy LH	1	-
	236586	D20 - Guard Assy LH	-	1
8	235997	D15 - Guard Assy RH	1	-
	236587	D20 - Guard Assy RH	-	1
9	903931	M20 Nut Nyloc	4	4
10	909002	M20 Spring Washer	8	8
11	913702	Bolt M20 x 50 GR8.8 Hex ZP	4	4
12	913713	Bolt M20 x 65 GR8.8 Hex ZP	8	8

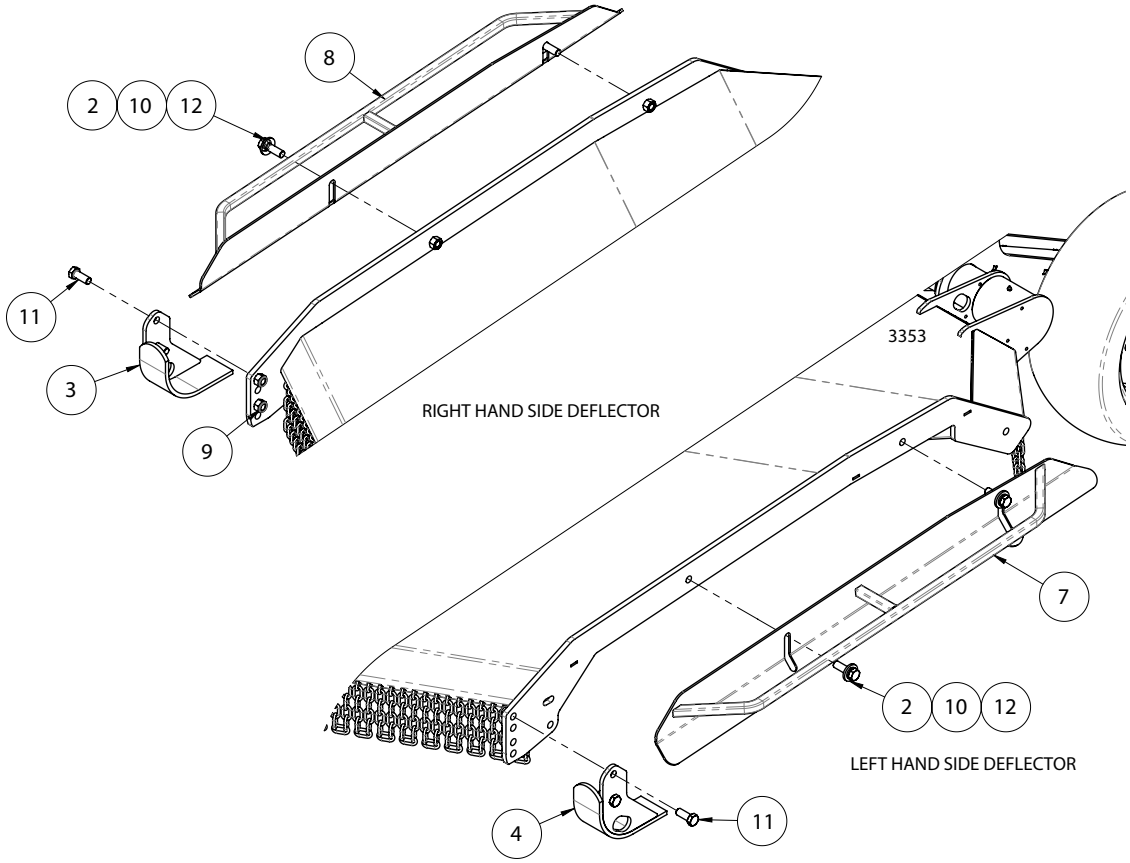

Mulch Throw Guard Configuration

Hydraulics - Wing Lift

HYDRAULIC SCHEMATIC

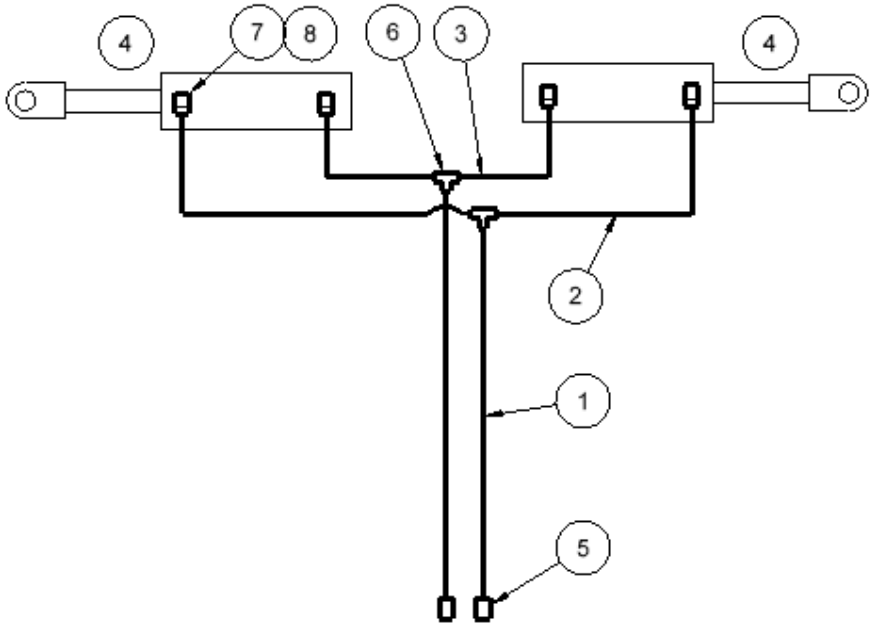

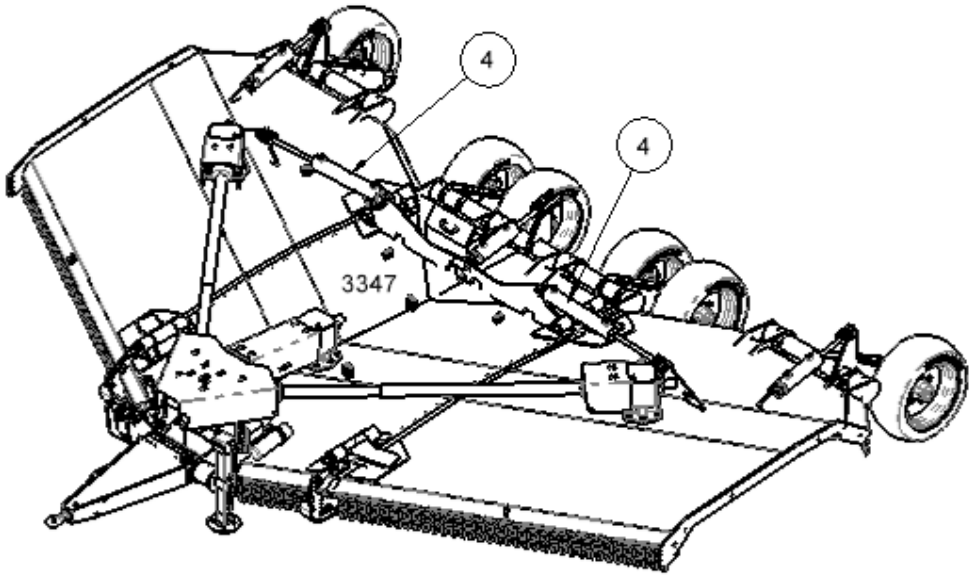

Item	GPN	Description	Qty 15’	Qty 20’
1	223560	Hose 3/8" SAE100R2 4600mm	2	-
	224369	Hose 3/8” SAE100R2 5000mm	-	2
2	223561	Hose 3/8" SAE100R2 1300mm	2	-
	224370	Hose 3/8” SAE100R2 1450mm	-	2
3	223666	Hose 3/8" SAE100R2 1400mm	2	-
	224373	Hose 3/8” SAE100R2 1550mm	-	2
4	237514	Cylinder Hyd 4" x 18" (Nordon)	2	2
	237798	Cylinder Hyd 4” x 18” (Bareco)		
5	804053	Nipple Quick Release 1/2"	2	2
6	812340	Tee 3/4” JIC MMM	2	2
7	812342	ELB 3/4” UNO x 3/4” JICM 90DEG	4	4
8	205338	Restrictor 3/4” JICM	2	2

Nordon Seal Kit Part Number

Cylinder	Seal Kit
GPN.237514	GPN.227723

Bareco Seal Kit Part Number

Cylinder	Seal Kit
GPN.237798	GPN.238984

IMPORTANT: Ensure restrictors are installed at rod end of cylinder.

Hydraulics - Height Control

Seal Kit Part Numbers

Cylinder GPN.	Seal Kit GPN.
GPN.223526	GPN.225945
GPN.223527	GPN.225944
GPN.223528	GPN.225943
GPN.223530	GPN.225942

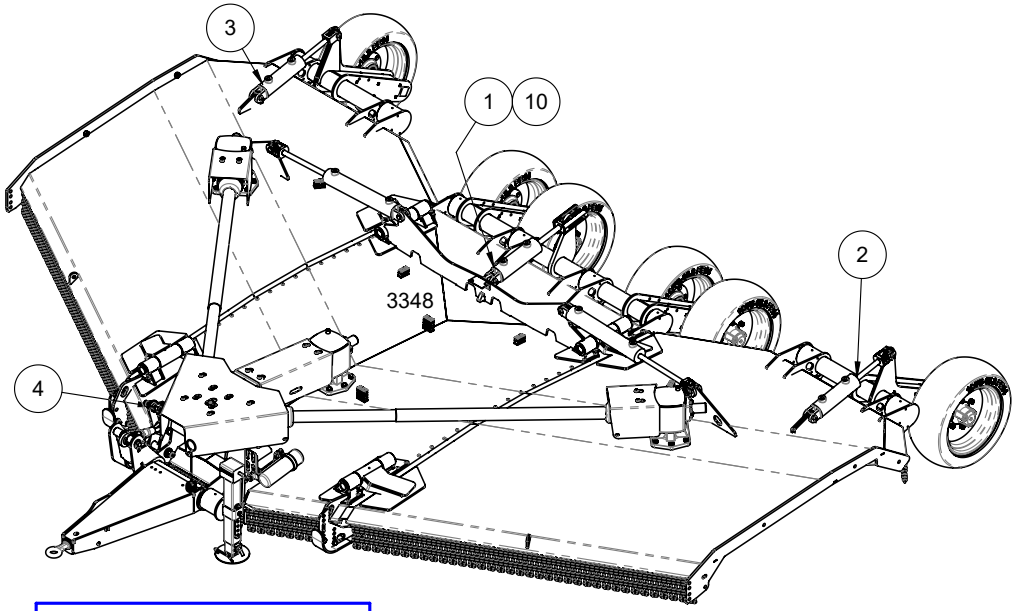

Item	GPN	Description	Qty 15’	Qty 20’
1	223526	Cylinder Assy 3.75" x 8”	1	1
2	223527	Cylinder Assy 3.5" x 8”	1	1
3	223528	Cylinder Assy 3.25" x 8”	1	1
4	223530	Cylinder Assy 3" x 8”	1	1
5	223559	Hose 3/8" SAE100R2 4200mm	1	1
6	223555	Hose 3/8" SAE100R2 5000mm	1	-
	224365	Hose 3/8” SAE100R2 5200mm	-	1
7	223557	Hose 3/8" SAE100R2 4300mm	1	-
	224366	Hose 3/8” SAE100R2 5170mm	-	1
8	223556	Hose 3/8" SAE100R2 4450mm	1	-
	224367	Hose 3/8” SAE100R2 5550mm	-	1
9	223558	Hose 3/8" SAE100R2 2850mm	1	-
	224368	Hose 3/8” SAE100R2 3200mm	-	1
10	229671	Depth Stop - 200mm Series Nordon	1	1
11	804053	Nipple Quick Release 1/2”	2	2

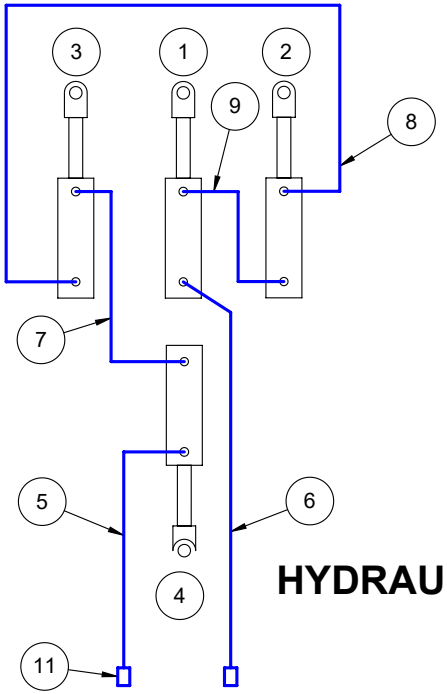

HYDRAULIC SCHEMATIC

Oversize Sign & Tail Lights Kit (Option)

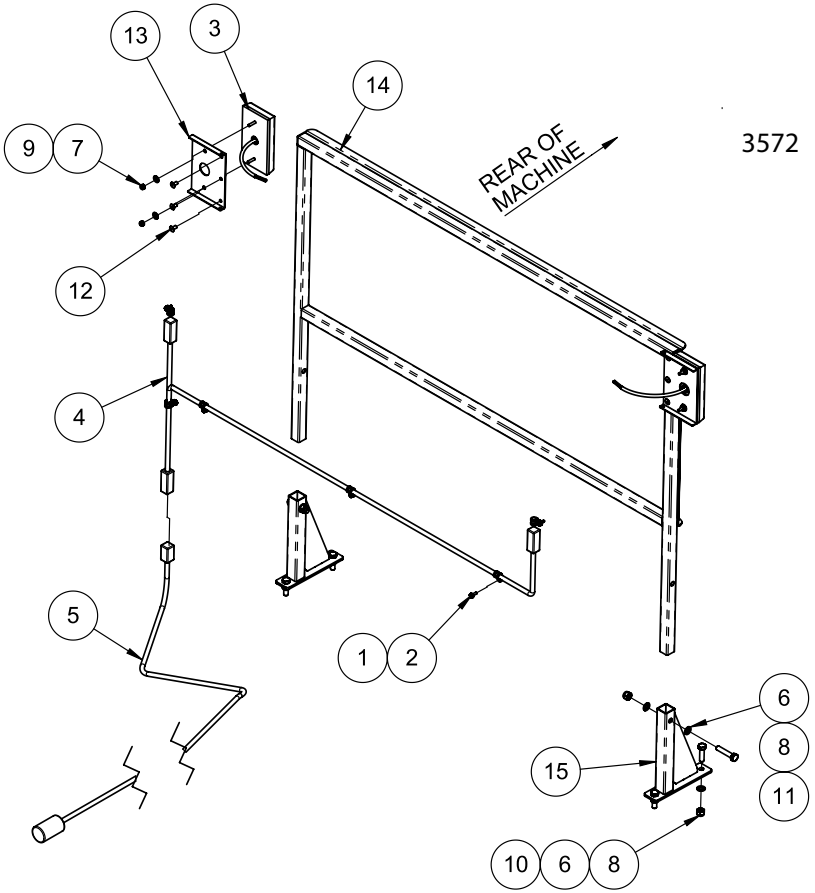

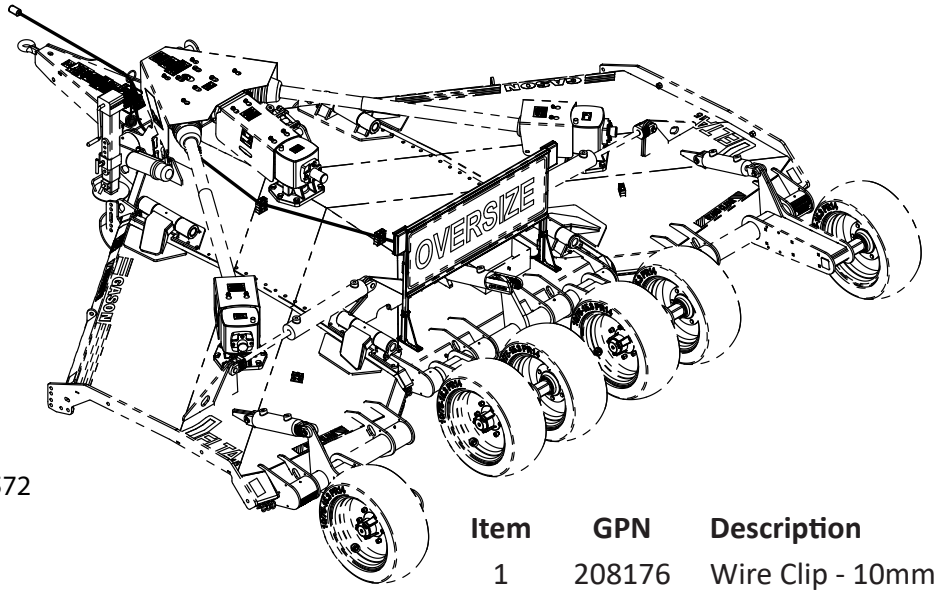

3572

Item	GPN	Description	Qty
1	208176	Wire Clip - 10mm	6
2	213151	Tek Screw - 10-16x16	6
3	231563	Light - Rear Combination	2
4	237888	Wiring Loom - Sign & Lights	1
5	237889	Wiring Loom - Main	1
6	800894	Flat Washer M10x19	8
7	903204	M6 Nyloc Nut	4
8	903406	M10 Nyloc Nut	6
9	907208	Flat Washer M6x16	4
10	917405	M10x35 Set Screw	4
11	917408	M10x50 Set Screw	2
12	929001	Rivet - 1/4”	6
13	237506	Light Mount Plate	2
14	237504	Oversize Sign Assembly	1
15	237503	Sign Mount	2